CRITICAL AREAS REPORT

ARENA SPORTS PROJECT
MILL CREEK, WASHINGTON

Prepared For:
CSA MILL CREEK REAL ESTATE, LLC

Prepared By:
TALASAEA CONSULTANTS, INC

24 October 2016

Critical Areas Report

Arena Sports
Mill Creek, Washington

Prepared For:

Norm Gill
CSA Mill Creek Real Estate, LLC
9040 Willows Road NE
Redmond, Washington 98052

Prepared By:

Talasaea Consultants, Inc.
15020 Bear Creek Road NE
Woodinville, Washington 98077

24 October 2016

EXECUTIVE SUMMARY

PROJECT NAME: Arena Sports

CLIENT: CSA Mill Creek Real Estate, LLC

SITE LOCATION: 13518 Bothell-Everett Highway (SR-527). The Public Land Survey System location of the site is T28N, R5E, Section 31, Willamette Meridian.

PROJECT STAFF: Bill Shiels, Principal; Ann Olsen, Senior Project Manager; David R. Teesdale, Senior Wetland Ecologist; Jordan Macke, Ecologist.

FIELD SURVEY 2012 March 27.

DETERMINATION: One offsite wetland was delineated by Talasaea and others. It was initially thought that this wetland extended onto the subject property. Talasaea was able to demonstrate that the expansion of the wetland onto the subject property was the result of road improvements along Dumas Road that raised the invert elevation of a pipe that collects water from the wetland. Subsequently, it was determined that the offsite wetland boundary did not extend past the subject property's boundary.

The wetland was rated using the Washington State Wetland Rating System for Western Washington (2014). The wetland is a City of Mill Creek Category IV wetland. It scored 7 points for Water Quality Functions, 4 points for Hydrology Functions, and 4 points for Habitat Functions. The Total Score for Functions is 15. The standard buffer width for a Category IV wetland in the City of Mill Creek is 50 feet.

PROPOSED PROJECT: The proposed project will construct a sports building and associated parking on approximately 6.48 acres of the approximately 6.73-acre site. Access to the building will be provided by driveways off of the Bothell-Everett Highway and Dumas Road. There will be no impacts to any critical areas or their buffers resulting from the proposed project. No mitigation will be required.

Copyright © 2016 Talasaea Consultants, Inc.

TABLE OF CONTENTS

Chapter 1. Introduction 1

1.1 Report Purpose 1
1.2 Statement of Accuracy 1
1.3 Staff Names and Qualifications 1

Chapter 2. General Property Description and Land Use 2

Chapter 3. Methodology 2

3.1 Background Data Reviewed 3
3.2 Field Investigations and Project Timeline 3

Chapter 4. Results 4

4.1 Analysis of Existing Information 4
4.1.1 National Wetland Inventory 4
4.1.2 NRCS Soils Data 4
4.1.3 Snohomish County Critical Areas Data 4
4.2 Existing Conditions 5

Chapter 5. Proposed Project 5

Chapter 6. Summary 6

Chapter 7. References 7

Copyright © 2016 Talasaea Consultants, Inc.

LIST OF FIGURES

Figure 1 – Vicinity Map
Figure 2 – Site Map
Figure 3 – NWI Map for the Bothell and Everett Quadrangles
Figure 4 – NRCS Soils Map Snohomish County Area
Figure 5 – Snohomish County Critical Areas GIS
Figure 6 – Offsite Wetland Map
Figure 7 – Proposed Site Development

APPENDICES

Appendix A: Wetland Rating Sheets (2014)
Appendix B: Plan Sheets (LDC)

Copyright © 2016 Talasaea Consultants, Inc.

CHAPTER 1. INTRODUCTION

1.1 Report Purpose

This report is the result of a critical areas study of the Arena Sports project property (referred to as "Site" hereinafter), located at 13518 Bothell-Everett Highway (SR-527) in Mill Creek, Washington (**Figure 1**). The Site is the location of a proposed athletic building. The purpose of this report is to describe the existing environmental conditions of the site and surrounding properties and discuss how the proposed development might impact any such critical areas or buffers.

This report has been written to meet the critical areas reporting requirements as outlined in Mill Creek Municipal Code (MCMC) §18.06.530. MCMC §18.06.530(B) requires that a critical areas report provide:

1. "A detailed description of the critical area and buffers on or adjacent to the project site, including the size, type/classification, condition, disturbance history, and functions and values;
2. A site plan for the development proposal showing the proposed development footprint and clearing limits, and all critical areas and buffers;
3. A description of the proposed stormwater management plan (both temporary and permanent) for the development and evaluation of impacts to proposed or actual drainage alterations;
4. The names and qualifications of the persons preparing the report, and documentation of the dates and all fieldwork performed on the site;
5. A detailed assessment of the potential impacts to critical areas and buffers resulting from site development;
6. An analysis of site development alternatives and measures taken or to be taken to avoid and minimize critical area impacts; and
7. Any additional information for the critical area as required by subsequent sections of this chapter."

1.2 Statement of Accuracy

Wetland delineation, characterization, rating, and functional analyses were conducted by trained professionals at Talasaea Consultants, Inc., and adhered to the protocols, guidelines, and generally accepted industry standards available at the time work was performed. The conclusions in this report are based on the results of analyses performed by Talasaea Consultants and represent our best professional judgment. We believe the information provided herein is accurate and true to the best of our knowledge. Talasaea Consultants does not warrant any assumptions or conclusions not expressly made in this report, or based on information or analyses other than what is included herein.

1.3 Staff Names and Qualifications

- William E. Shiels, Principal. BS, Biology from Central Washington University. MS, Oceanography, University of Alaska. Over 38 years of professional experience in natural resources, environmental planning and design, project management, and field and laboratory analysis.

Copyright © 2016 Talasaea Consultants, Inc.

- David R. Teesdale, PWS, Senior Wetland Ecologist. BA, Biology from Grinnell College. MS, Ecology from Illinois State University. Over 20 years of experience in critical areas delineation and rating, mitigation design, research, and biological assessments.

CHAPTER 2. GENERAL PROPERTY DESCRIPTION AND LAND USE

The Site is an assemblage of three parcels in the City of Mill Creek (**Figure 2**). The parcels are identified for the purposes of this report as Parcel A (parcel number 28053100103200), Parcel B (parcel number 28053100104000), and Parcel C (28053100103400). Parcel A is an irregularly-shaped parcel approximately 0.8 acres in size. It is located approximately 360 feet northwest of the intersection of Dumas Road and the Bothell-Everett Highway (SR-527) in the City of Mill Creek, Washington. Access to Parcel A is currently by a "stove pipe" extending to Dumas Road between two adjacent parcels (28053100103100 (Robinson) and 28053100102800 (Langendorfer). Parcel B is located to the northeast of Parcel A. It is an irregularly-shaped parcel approximately 4.7 acres in size. Parcel C is a roughly rectangular shaped parcel that is surrounded on three sides by Parcel B. It is approximately 1.4 acres in size. Parcel C also abuts the two Langendorfer parcels (28053100102900 in addition to 28053100102800) on its southwestern boundary. Parcel A is the subject of this letter report, but is also discussed in conjunction with overall development plans for the entire Cedar Park Property assemblage, which includes Parcels A, B and C.

The topography of the Site is generally flat and level with water draining generally in a southwesterly direction, with the exception of Parcel A. Parcel A is currently undeveloped and drains to the northwest towards Dumas Road. Parcel B is mostly lawn with some forest vegetation. One outbuilding exists in the northern portion of Parcel B. Parcel C is developed as a single-family residence. Access to this residence is provided by a gravel driveway off of the Bothell-Everett Highway. The Robinson and Langendorfer properties (on either side of Parcel A's flag lot connection to Dumas Road) are developed as single-family residences. Property to the north is developed as multi-family residential. The property to the northeast is developed as a retail strip mall. Property to the south is developed as a service station and quick mart.

CHAPTER 3. METHODOLOGY

The critical areas analysis of the Site involved a two-part effort. The first part consisted of a preliminary assessment of the Site and the immediate surrounding area using published environmental information. This information included:

1. Wetland and soils information from resource agencies;
2. Critical areas map information from the city of Mill Creek and Snohomish County;
3. Orthophotography;
4. LIDAR terrain data; and
5. Relevant studies completed or ongoing in the vicinity of the site.

The second part consisted of a site investigation where direct observations and measurements of existing environmental conditions were made. Observations included plant communities, soils, and hydrology. This information was used to help characterize

Copyright © 2016 Talasaea Consultants, Inc.

the existing site conditions of the property and to identify and delineate critical areas (see **Section 3.2 – Field Investigations** below).

3.1 Background Data Reviewed

Background information from the following sources was reviewed prior to field investigations:

- US Fish and Wildlife Service (USFWS) Wetlands Online Mapper (National Wetlands Inventory) (www.wetlandsfws.er.usgs.gov/wtlnds/launch.html);
- Natural Resources Conservation Service Web Soil Survey (www.soils.usda.nrcs.gov/app);
- Snohomish County GIS database (Snohomish County, 2015);
- Washington Department of Fish and Wildlife Priority Habitats and Species Database (2015); and
- City of Mill Creek Critical Areas Maps.

3.2 Field Investigations and Project Timeline

Land use activities over the past eight years have created changes to the existing conditions on the Site. The following numberd list illustrates a timeline of these events.

1. Fall 2004: Improvements to Dumas Road are begun, constructed by, or in conjunction with, the City of Mill Creek.
2. December 4, 2004: Altmann-Oliver Associates (AOA) performed an environmental assessment of the Cedar Park Church property (Parcel ID 28053100103200) adjacent to the Robinson Property (Parcel ID 28053100103100). The Robinson Parcel contains a small wetland area adjacent to Dumas Road. Wetland delineation occurred before planned alterations of the outlet of the wetland on the Robinson Parcel.
3. Spring 2005: Improvements to Dumas Road are completed.
4. May 13, 2005: AOA finalized their critical areas report for the Cedar Park Church property.
5. June 24, 2005: Wetland delineation was peer-reviewed by Parametrix. Alteration of the outlet to the wetland on the Robinson Parcel had been in place for several months by this time.
6. June 30, 2005: Parametrix finalized their peer review letter concerning the AOA wetland delineation. Parametrix indicated in their letter that wetland conditions likely extended on to the Cedar Park property.
7. March 27, 2012: Talasaea Consultants was asked to review the area in question and concluded that surface water levels had risen in the wetland and had contributed to the creation of wetland conditions on the Cedar Park property.
8. March 2012: LDC surveys the catch basin on Dumas Road that replaced the original wetland outlet and discovered that it is 0.87 feet higher than specified on the engineering plans for that section of Dumas Road.
9. May 2012: Talasaea Consultants observed the levels of soil saturation on the Cedar Park Church property and determined the capillary fringe of the soil. Talasaea combined the capillary fringe data of the soil, site survey data from

Copyright © 2016 Talasaea Consultants, Inc.

LDC (including a survey of the invert elevations of the catch basin that provides drainage for the Robinson Property wetland), and original survey data of existing conditions (prior to Dumas Road improvements) with LIDAR data. A terrain profile was generated from the LIDAR data. The invert elevations of the wetland outlet prior to and after construction of Dumas Road were inserted on the profile as well as a representation of capillary fringe for the soil. The resulting graph clearly indicates that wetland conditions seen in the field match the expected soil saturation conditions resulting from the higher invert elevation of the wetland outlet.

10. November 2012: The City of Mill Creek, through their third-party reviewer (ESA), concurred with our analysis that the extent of the offsite wetland should be the boundary delineated prior to the Dumas Road improvements.
11. August 2016: The City of Mill Creek, through their third-party reviewer (ESA), concurred with our rating of the offsite wetland.

CHAPTER 4. RESULTS

4.1 Analysis of Existing Information

This section describes the results of our in-house research and field investigations. For the purposes of this report, the term “vicinity” describes an area approximately ¼ mile around the Site.

4.1.1 National Wetland Inventory

The National Wetland Inventory for the Bothell and Everett quadrangles does not map any wetlands on the Site. However, it does map four wetlands in the vicinity of the Site (**Figure 3**). These wetlands are identified as:

- Two palustrine emergent/scrub-shrub wetland that are seasonally flooded (PEM/SSC);
- One palustrine forested wetland that is seasonally flooded (PFOC); and
- One palustrine scrub-shrub wetland that is seasonally flooded (PSSC).

4.1.2 NRCS Soils Data

The NRCS maps one soil type on the Site: Alderwood gravelly sandy loam 2 to 8 percent slope (**Figure 4**). The Alderwood series is made up of moderately well drained soils that have a weakly consolidated to strongly consolidated substratum at a depth of 24- to 40-inches. These soils typically form under conifers in glacial deposits. Soil colors of the A-horizon range from very dark brown to dark brown. The B-horizon is typically dark brown, grayish brown, and dark yellowish brown. The National Technical Committee for Hydric Soils does not list the Alderwood series as a hydric soil. However, the map unit for the Site is identified as a partially hydric soil. A partially hydric soil is defined as one that is typically not hydric, but contains an associated hydric soil that comprises a significant fraction of the map unit.

4.1.3 Snohomish County Critical Areas Data

Snohomish County does not map any wetlands or streams on the Site (**Figure 5**). However, it does map four wetlands within the vicinity of the Site. The Snohomish

Copyright © 2016 Talasaea Consultants, Inc.

County wetlands GIS database does not provide up-to-date information on wetland types or classifications. All of the wetlands mapped within the vicinity of the Site are in excess of 225 feet of the development footprint with existing high intensity land use development between the wetlands and the Site. These offsite wetlands mapped by Snohomish County will not affect any proposed development on the Site.

4.2 Existing Conditions

The Site is currently developed with one residence and one outbuilding. Access to the Site is provided by an unimproved driveway off of SR-527, approximately 248 feet northeast of the intersection of SR-527 and Dumas Road.

Most of the 6.9-acre Site is maintained as lawn (approximately 4.7 acres) (**Figure 6**). Two areas of forest exist on the Site surrounded by the lawn. One of the forested areas, located entirely within Parcel B, is approximately 1.6 acres in size. The other forested area, located along the common boundary of Parcels A, B, and C, is approximately 0.6 acres in size.

The Site does not have any wetlands or streams within its boundaries (**Figure 6**). However, one wetland, Wetland A, was identified on the Robinson parcel adjacent to the southwest corner of the Site. Wetland A extends from Dumas Road up to, but not onto, the Site. Hydrology for Wetland A is supported, for the most part, by interception of shallow groundwater and incident precipitation. The outlet elevation of Wetland A is controlled by a stormwater pipe adjacent to Dumas Road (see project timeline discussion in **Section 3.2 – Field Investigations and Project Timeline**).

Wetland A was rated using the 2014 Washington Department of Ecology's Wetland Rating System for Western Washington (Hruby, 2014). The wetland scored 7 points for Water Quality Functions, 4 points for Hydrology Functions, and 4 points for Habitat Functions. The Total Score for Functions is 15, which satisfies the criteria for characterization as a Class IV wetland. A Class IV wetland within the City of Mill Creek has a 50-foot standard buffer.

CHAPTER 5. PROPOSED PROJECT

Arena Sports plans to develop the three parcels as a sports facility with associated parking (**Figure 7** and **Appendix B** (Sheet 2 of 2 by LDC)). Parcel B will also have two stormwater detention vaults located adjacent to SR-527. Access to the office-building complex will be provided at two points. One point will utilize the stovepipe portion of Parcel A for access from Dumas Road. This point will allow both left and right turns for entrance and exit. An additional access point will be located at the east corner of Parcel B, providing right in - right out access from SR-527. The remainder of the two parcels will provide parking spaces as required by City of Mill Creek Municipal Code. The proposed site development plan has been designed to avoid all impacts to critical areas and their associated buffers.

Copyright © 2016 Talasaea Consultants, Inc.

The proposed development plan will utilize almost the entire area of the Site with the exception of an approximately 10,871 sf area of Parcel A. This approximately 10,871 sf area will be retained to provide a 50-foot buffer for the offsite wetland.

A drainage report was prepared for the proposed project by LDC, Inc. Two drainage basins were identified for the Site in this report. Most of the Site drains to the south, while a smaller portion provides hydrology for the offsite wetland. The proposed project will maintain the hydrology for the wetland, but will limit treated stormwater discharge to the wetland to the calculated 2-yr flood event. Stormwater volume in excess of the 2-yr flood event will be directed to the larger drainage basin. This hydroperiod will be maintained both during and after site development. Stormwater discharge in maintenance of the wetland's hydroperiod will be provided via a 50-foot-long level spreader to be located near the northeast corner of the standard 50-ft wetland buffer.

During construction, stormwater on the majority of the Site (that portion of the site that is not included in the drainage basin for the offsite wetland) will be collected and directed to a temporary storm pond that will be constructed in the southwest corner of Parcel B. Treated stormwater will be released to the regional stormwater system along the Bothell-Everett Highway.

After construction, stormwater not being released to maintain the hydrology for offsite wetland will be directed to a stormwater treatment and detention facility to be located in the southern portion of the Site. Stormwater will first be directed through a constructed modular wetland for initial enhanced water quality treatment. The pretreated stormwater will then be discharged into a stormwater vault located beneath under the parking area adjacent to the Bothell-Everett Highway. Treated stormwater will then be discharged to the regional stormwater system along the Bothell-Everett Highway.

All site development will be outside of the standard 50-foot Category IV wetland buffer that extends onto Parcel A from the Robinson parcel. There will be no wetland or buffer impacts resulting from the proposed development. No mitigation will be required.

CHAPTER 6. SUMMARY

The Arena Sports project will construct an approximately 84,721 sf sports building on three parcels of land. Access to the new facility will be provided off of the Bothell-Everett Highway and a new access driveway off of Dumas Road. Approximately 6.48 acres of the approximately 6.73-acre Site will be developed. The approximately 0.25 acre portion of the Site that will not be developed contains a 50-ft buffer for an offsite Category IV wetland. The project will maintain hydrology to the wetland through controlled discharge of treated stormwater to a level spreader located north of the buffer's edge. There will be no impacts to critical areas or buffers resulting from the proposed project. No mitigation will be required.

Copyright © 2016 Talasaea Consultants, Inc.

CHAPTER 7. REFERENCES

Code Publishing. (2016, October 11). *Mill Creek Municpal Code*. Retrieved from Code Publishing: www.codepublishing.com/WA/MillCreek

Cowardin, L. M., Carter, V., Golet, F. C., & LaRoe, E. T. (1979). *Classification of Wetlands and Deepwater Habitats of the United States.* Washington, DC: U.S. Department of the Interior, Fish and Wildlife Service.

Hitchcock, C., & Cronquist, A. (1973). *Flora of the Pacific Northwest.* University of Washinton Press.

Hruby, T. (2014). *Washington State Wetland Rating System for Western Washington: 2014 Update (Publication #14-06-029).* Olympia: Washington Department of Ecology.

Lichvar, R. (2012). *The National Wetland Plant List.* Hanover, NH: U.S. Army Corps of Engineers, Cold Regions Research and Engineering Laboratory. Retrieved from http://acwc.sdp.sirsi.net/client/search/asset:asset?t:ac=$N/1012381

Munsell Color. (1988). *Munsell Soil Color Charts*. Grand Rapids, Michigan: X-RiteCorp.

Natural Resources Conservation Service. (2012, April). *National Technical Committee for Hydric Soils - Hydric Soils List*. Retrieved January 2014, from http://www.nrcs.usda.gov/wps/portal/nrcs/main/soils/use/hydric/

U.S. Army Corps of Engineers. (2010, May). *Regional Supplement to the Corps of Engineers Wetland Delineation Manual: Western Mountains, Valleys, and Coast Region (Version 2.0).* U. S. Army Corps of Engineers. Vicksburg, MS: U.S. Army Engineer Research and Development Center.

U.S. Department of the Interior, Fish and Wildlife Service. (2016, October 11). National Wetlands Inventory Map. Washington D.C.

Copyright © 2016 Talasaea Consultants, Inc.

Figures

Copyright © 2016 Talasaea Consultants, Inc.

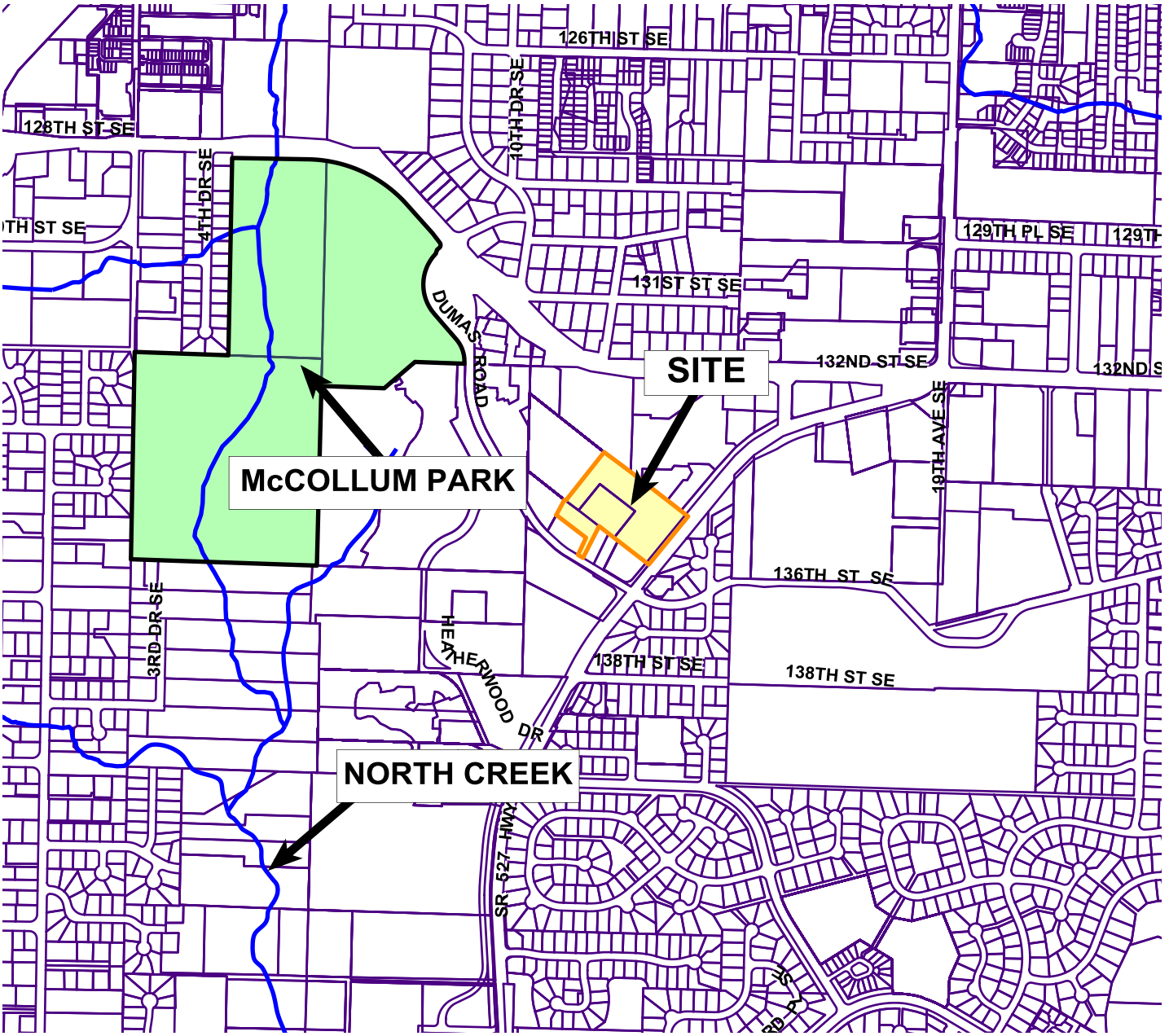

N

Reference: GIS road, parcel, and critical areas data from Snohomish County GIS, 2014.

TALASAEA CONSULTANTS, INC.
Resource & Environmental Planning
15020 Bear Creek Road Northeast
Woodinville, Washington 98077
Bus (425)861-7550 – Fax (425)861-7549

FIGURE 1

VICINITY MAP
ARENA SPORTS PROJECT
MILL CREEK, WASHINGTON

DESIGN	DRAWN	PROJECT
	DRT	1393C

SCALE 1 in : 1000 ft

DATE 21 OCT 2016

REVISED

1

© Copyright – Talasaea Consultants, INC.

N

Reference: GIS road and parce data from Snohomish County GIS, 2014. Aerial image 2012 from Earth Explorer, 2016.

TALASAEA CONSULTANTS, INC.
Resource & Environmental Planning
15020 Bear Creek Road Northeast
Woodinville, Washington 98077
Bus (425)861-7550 - Fax (425)861-7549

FIGURE 2
SITE MAP
ARENA SPORTS PROJECT
MILL CREEK, WASHINGTON

DESIGN	DRAWN	PROJECT
	DRT	1393C

SCALE 1 in : 150 ft

DATE 21 OCT 2016

REVISED

2

© Copyright - Talasaea Consultants, INC.

Reference: GIS road, parcel, and critical areas data from Snohomish County GIS, 2014. Aerial image 2012 from Earth Explore, 2016. NWI GIS data 1981 from the National Wetlands Inventory.

TALASAEA CONSULTANTS, INC.
Resource & Environmental Planning
15020 Bear Creek Road Northeast
Woodinville, Washington 98077
Bus (425)861-7550 - Fax (425)861-7549

FIGURE 3
NWI MAP for the BOTHELL and EVERETT QUADRANGLES
ARENA SPORTS PROJECT
MILL CREEK, WASHINGTON

DESIGN	DRAWN	PROJECT
	DRT	1393C
SCALE 1 in : 400 ft		
DATE 21 OCT 2016		3
REVISED		

© Copyright - Talasaea Consultants, INC.

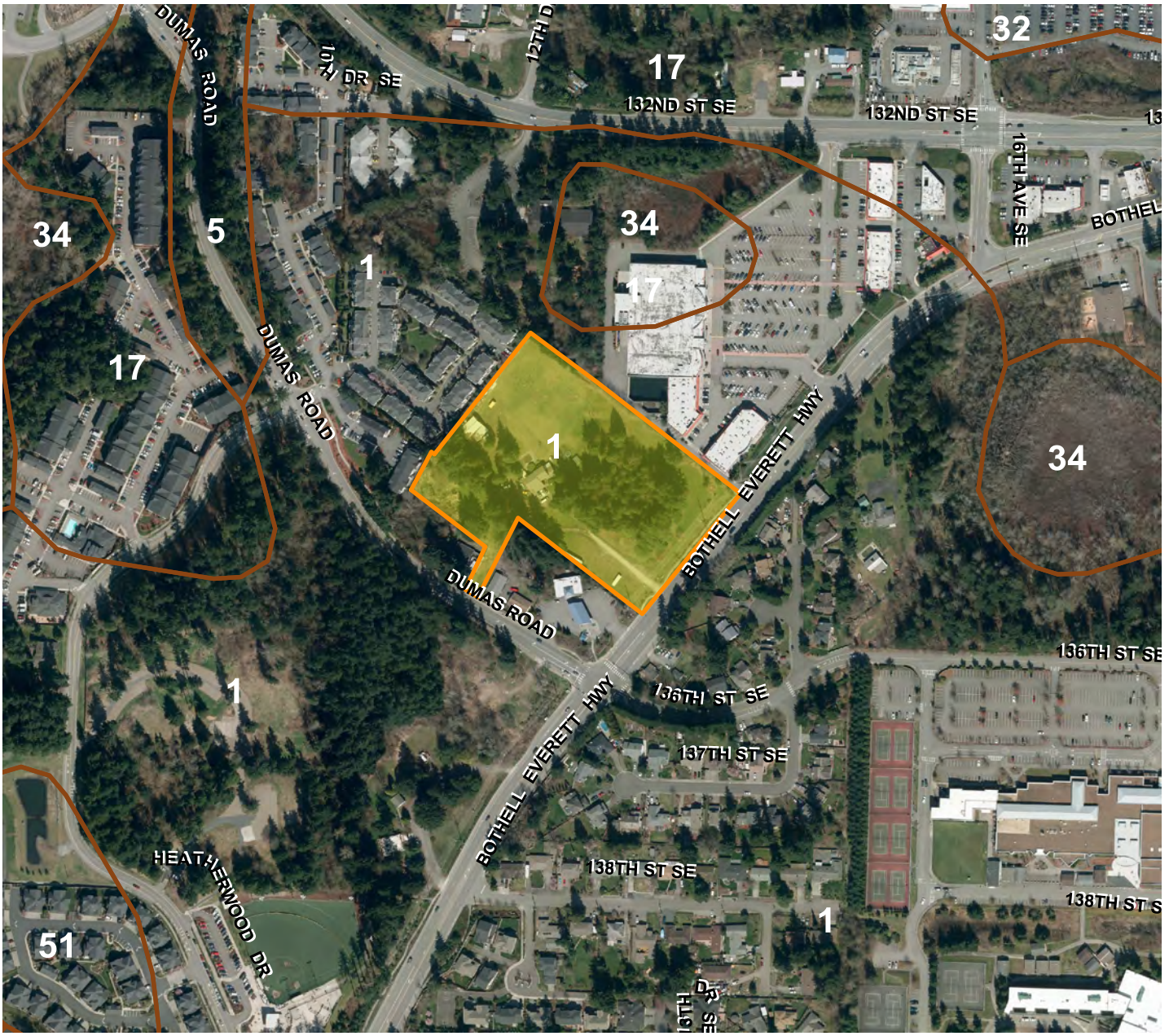

Soil MUSYM Legend:

1 - Alderwood gravelly sandy loam - 2 to 5 percent slope
5 - Alderwood gravelly sandy loam - 15 to 25 percent slope
17 - Everett gravelly sandy loam - 0 to 8 percent slope
32 - McKenna gravelly silt loam - 0 to 8 percent slope
34 - Mukilteo muck
51 - Pits (mining operation)

N

Reference: GIS road, parcel, and critical areas data from Snohomish County GIS, 2015.

TALASAEA CONSULTANTS, INC.
Resource & Environmental Planning
15020 Bear Creek Road Northeast
Woodinville, Washington 98077
Bus (425)861-7550 - Fax (425)861-7549

FIGURE 4

NRCS SOILS MAP
SNOHOMISH COUNTY AREA
ARENA SPORTS PROJECT
MILL CREEK, WASHINGTON

DESIGN	DRAWN	PROJECT
	DRT	1393C

SCALE 1 in : 400 ft

DATE 21 OCT 2016

REVISED

4

© Copyright - Talasaea Consultants, INC.

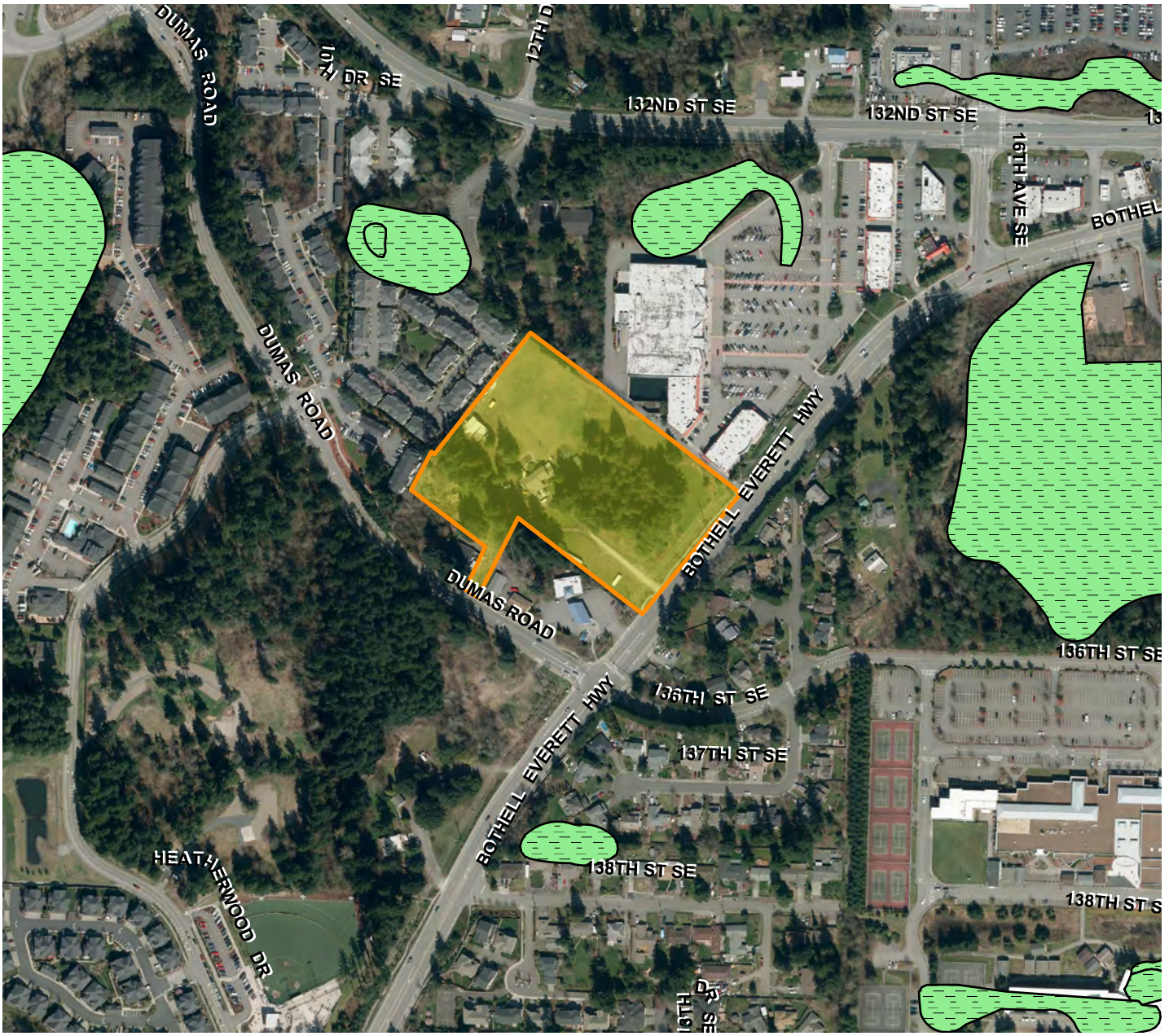

LEGEND

Snohomish County Wetland

N

Reference: GIS road, parcel, and critical areas data from Snohomish County GIS, 2014. Aerial image 2012 from Earth Explorer, 2016.

TALASAEA CONSULTANTS, INC.
Resource & Environmental Planning
15020 Bear Creek Road Northeast
Woodinville, Washington 98077
Bus (425)861-7550 - Fax (425)861-7549

FIGURE 5

SNOHOMISH COUNTY CRITICAL AREAS GIS
ARENA SPORTS PROJECT
MILL CREEK, WASHINGTON

DESIGN	DRAWN	PROJECT
	DRT	1393C

SCALE 1 in : 400 ft

DATE 21 OCT 2016

REVISED

5

© Copyright - Talasaea Consultants, INC.

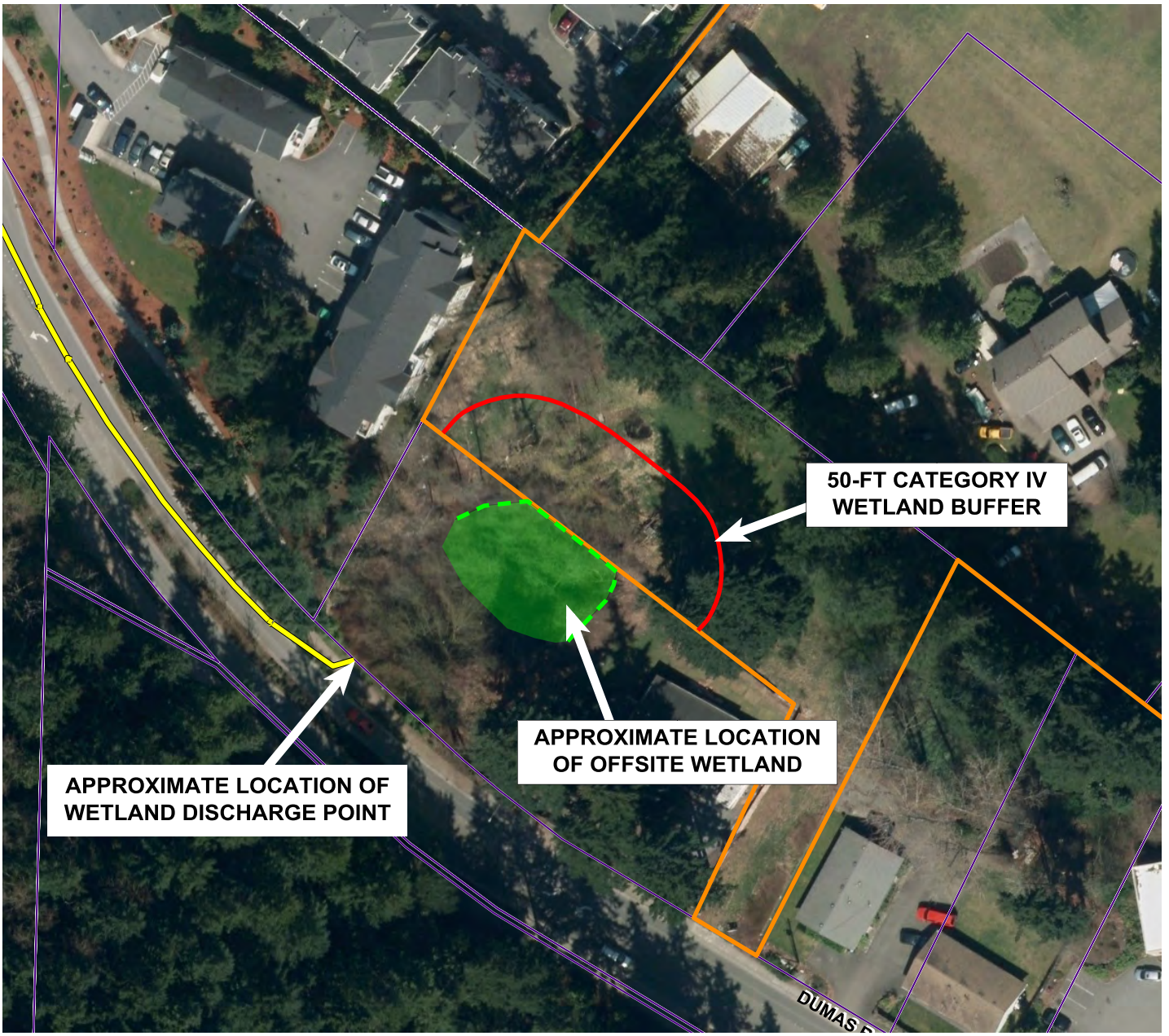

N

Reference: GIS road, parcel, and critical areas data from Snohomish County GIS, 2014. Regional stormwater system survey provided by LDC, 2012. Aerial image 2012 from Earth Explorer, 2016.

TALASAEA
CONSULTANTS, INC.
Resource & Environmental Planning
15020 Bear Creek Road Northeast
Woodinville, Washington 98077
Bus (425)861-7550 - Fax (425)861-7549

FIGURE 6

OFFSITE WETLAND MAP
ARENA SPORTS PROJECT
MILL CREEK, WASHINGTON

DESIGN	DRAWN	PROJECT
	DRT	1393C

SCALE 1 in : 80 ft

DATE 21 OCT 2016

REVISED

6

© Copyright - Talasaea Consultants, INC.

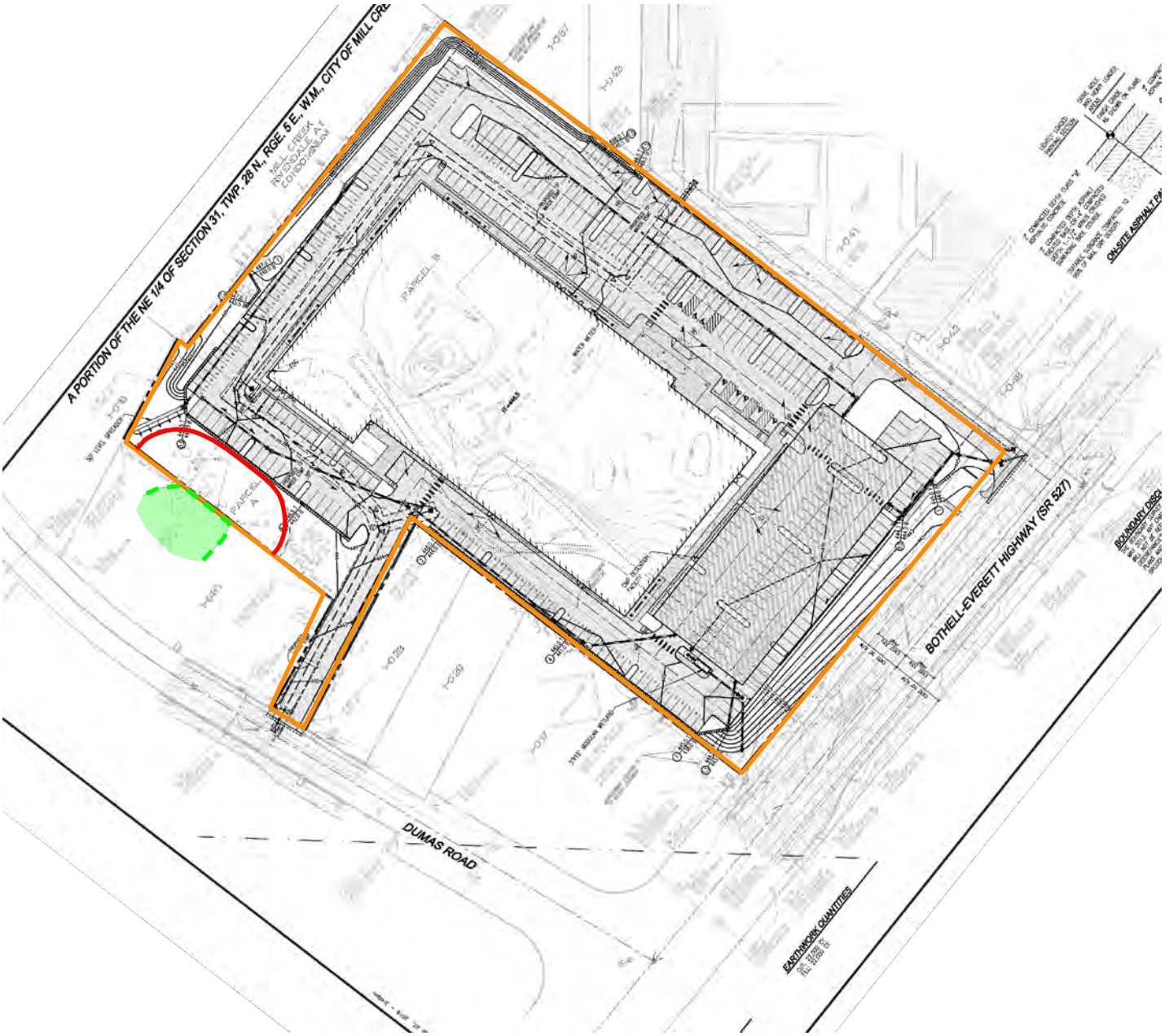

N

Reference: Site development plan Page 4 of 12, provided by LDC, 2016.

TALASAEA CONSULTANTS, INC.
Resource & Environmental Planning
15020 Bear Creek Road Northeast
Woodinville, Washington 98077
Bus (425)861-7550 – Fax (425)861-7549

FIGURE 7

PROPOSED SITE DEVELOPMENT
ARENA SPORTS PROJECT
MILL CREEK, WASHINGTON

DESIGN	DRAWN	PROJECT
	DRT	1393C

SCALE 1 in : 150 ft

DATE 21 OCT 2016

REVISED

7

© Copyright – Talasaea Consultants, INC.

Appendix A

Wetland Rating Sheets (Washington State Wetland Rating System for Western Washington (2014))

Copyright © 2016 Talasaea Consultants, Inc.

Wetland name or number A

RATING SUMMARY – Western Washington

Name of wetland (or ID #): TAL-1393 B Wetland A Date of site visit: 06-14-16

Rated by DRY Trained by Ecology? X Yes ___ No Date of training 10-15

HGM Class used for rating PSS Wetland has multiple HGM classes? ___ Y ___ N

NOTE: Form is not complete without the figures requested *(figures can be combined).*

Source of base aerial photo/map _____

OVERALL WETLAND CATEGORY _____ (based on functions___ or special characteristics___)

1. Category of wetland based on FUNCTIONS

_____ **Category I** – Total score = 23 - 27

_____ **Category II** – Total score = 20 - 22

_____ **Category III** – Total score = 16 - 19

X **Category IV** – Total score = 9 - 15

FUNCTION	Improving Water Quality	Hydrologic	Habitat	
		Circle the appropriate ratings		
Site Potential	H (M) L	H M (L)	H M (L)	
Landscape Potential	H (M) L	H (M) L	H M (L)	
Value	(H) M L	H M (L)	H (M) L	TOTAL
Score Based on Ratings	7	4	4	15

Score for each function based on three ratings *(order of ratings is not important)*

9 = H,H,H
8 = H,H,M
7 = H,H,L
7 = H,M,M
6 = H,M,L
6 = M,M,M
5 = H,L,L
5 = M,M,L
4 = M,L,L
3 = L,L,L

2. Category based on SPECIAL CHARACTERISTICS of wetland

CHARACTERISTIC	CATEGORY
Estuarine	I II
Wetland of High Conservation Value	I
Bog	I
Mature Forest	I
Old Growth Forest	I
Coastal Lagoon	I II
Interdunal	I II III IV
None of the above	X

Wetland name or number A

HGM Classification of Wetlands in Western Washington

For questions 1-7, the criteria described must apply to the entire unit being rated.

If the hydrologic criteria listed in each question do not apply to the entire unit being rated, you probably have a unit with multiple HGM classes. In this case, identify which hydrologic criteria in questions 1-7 apply, and go to Question 8.

1. Are the water levels in the entire unit usually controlled by tides except during floods?

   NO – go to 2 **YES** – the wetland class is **Tidal Fringe** – go to 1.1

   1.1 Is the salinity of the water during periods of annual low flow below 0.5 ppt (parts per thousand)?

   NO – Saltwater Tidal Fringe (Estuarine) **YES – Freshwater Tidal Fringe**
   *If your wetland can be classified as a Freshwater Tidal Fringe use the forms for **Riverine** wetlands. If it is Saltwater Tidal Fringe it is an **Estuarine** wetland and is not scored. This method **cannot** be used to score functions for estuarine wetlands.*

2. The entire wetland unit is flat and precipitation is the only source (>90%) of water to it. Groundwater and surface water runoff are NOT sources of water to the unit.

   NO – go to 3 **YES** – The wetland class is **Flats**
   *If your wetland can be classified as a Flats wetland, use the form for **Depressional** wetlands.*

3. Does the entire wetland unit **meet all** of the following criteria?
   ___The vegetated part of the wetland is on the shores of a body of permanent open water (without any plants on the surface at any time of the year) at least 20 ac (8 ha) in size;
   ___At least 30% of the open water area is deeper than 6.6 ft (2 m).

   NO – go to 4 **YES –** The wetland class is **Lake Fringe** (Lacustrine Fringe)

4. Does the entire wetland unit **meet all** of the following criteria?
   ___The wetland is on a slope (*slope can be very gradual*),
   ___The water flows through the wetland in one direction (unidirectional) and usually comes from seeps. It may flow subsurface, as sheetflow, or in a swale without distinct banks,
   ___The water leaves the wetland **without being impounded**.

   NO – go to 5 **YES –** The wetland class is **Slope**

   NOTE: Surface water does not pond in these type of wetlands except occasionally in very small and shallow depressions or behind hummocks (depressions are usually <3 ft diameter and less than 1 ft deep).

5. Does the entire wetland unit **meet all** of the following criteria?
   ___The unit is in a valley, or stream channel, where it gets inundated by overbank flooding from that stream or river,
   ___The overbank flooding occurs at least once every 2 years.

Wetland name or number A

NO – go to 6 **YES** – The wetland class is **Riverine**

~~**NOTE:** The~~ Riverine unit can contain depressions that are filled with water when the river is not flooding

6. Is the entire wetland unit in a topographic depression in which water ponds, or is saturated to the surface, at some time during the year? *This means that any outlet, if present, is higher than the interior of the wetland.*

   NO – go to 7 **YES** – The wetland class is **Depressional**

7. Is the entire wetland unit located in a very flat area with no obvious depression and no overbank flooding? The unit does not pond surface water more than a few inches. The unit seems to be maintained by high groundwater in the area. The wetland may be ditched, but has no obvious natural outlet.

   NO – go to 8 **YES** – The wetland class is **Depressional**

8. Your wetland unit seems to be difficult to classify and probably contains several different HGM classes. For example, seeps at the base of a slope may grade into a riverine floodplain, or a small stream within a Depressional wetland has a zone of flooding along its sides. GO BACK AND IDENTIFY WHICH OF THE HYDROLOGIC REGIMES DESCRIBED IN QUESTIONS 1-7 APPLY TO DIFFERENT AREAS IN THE UNIT (make a rough sketch to help you decide). Use the following table to identify the appropriate class to use for the rating system if you have several HGM classes present within the wetland unit being scored.

   NOTE: Use this table only if the class that is recommended in the second column represents 10% or more of the total area of the wetland unit being rated. If the area of the HGM class listed in column 2 is less than 10% of the unit; classify the wetland using the class that represents more than 90% of the total area.

HGM classes within the wetland unit being rated	HGM class to use in rating
Slope + Riverine	Riverine
Slope + Depressional	Depressional
Slope + Lake Fringe	Lake Fringe
Depressional + Riverine along stream within boundary of depression	Depressional
Depressional + Lake Fringe	Depressional
Riverine + Lake Fringe	Riverine
Salt Water Tidal Fringe and any other class of freshwater wetland	Treat as ESTUARINE

If you are still unable to determine which of the above criteria apply to your wetland, or if you have ***more than 2 HGM classes*** *within a wetland boundary, classify the wetland as Depressional for the rating.*

Wetland name or number A

DEPRESSIONAL AND FLATS WETLANDS

Water Quality Functions - Indicators that the site functions to improve water quality

D 1.0. Does the site have the potential to improve water quality?	
D 1.1. Characteristics of surface water outflows from the wetland: Wetland is a depression or flat depression (QUESTION 7 on key) with no surface water leaving it (no outlet). points = 3 Wetland has an intermittently flowing stream or ditch, OR highly constricted permanently flowing outlet. points = 2 Wetland has an unconstricted, or slightly constricted, surface outlet that is permanently flowing points = 1 Wetland is a flat depression (QUESTION 7 on key), whose outlet is a permanently flowing ditch. points = 1	1
D 1.2. The soil 2 in below the surface (or duff layer) is true clay or true organic *(use NRCS definitions)*. Yes = 4 No = 0	0
D 1.3. Characteristics and distribution of persistent plants (Emergent, Scrub-shrub, and/or Forested Cowardin classes): Wetland has persistent, ungrazed, plants > 95% of area points = 5 Wetland has persistent, ungrazed, plants > ½ of area points = 3 Wetland has persistent, ungrazed plants > $^{1}/_{10}$ of area points = 1 Wetland has persistent, ungrazed plants < $^{1}/_{10}$ of area points = 0	5
D 1.4. Characteristics of seasonal ponding or inundation: *This is the area that is ponded for at least 2 months. See description in manual.* Area seasonally ponded is > ½ total area of wetland points = 4 Area seasonally ponded is > ¼ total area of wetland points = 2 Area seasonally ponded is < ¼ total area of wetland points = 0	4
Total for D 1 Add the points in the boxes above	10

Rating of Site Potential If score is: ___ **12-16 = H** X **6-11 = M** ___ **0-5 = L** *Record the rating on the first page*

D 2.0. Does the landscape have the potential to support the water quality function of the site?	
D 2.1. Does the wetland unit receive stormwater discharges? Yes = 1 No = 0	0
D 2.2. Is > 10% of the area within 150 ft of the wetland in land uses that generate pollutants? Yes = 1 No = 0	1
D 2.3. Are there septic systems within 250 ft of the wetland? Yes = 1 No = 0	0
D 2.4. Are there other sources of pollutants coming into the wetland that are not listed in questions D 2.1-D 2.3? Source_____ Yes = 1 No = 0	0
Total for D 2 Add the points in the boxes above	1

Rating of Landscape Potential If score is: ___ **3 or 4 = H** X **1 or 2 = M** ___ **0 = L** *Record the rating on the first page*

D 3.0. Is the water quality improvement provided by the site valuable to society?	
D 3.1. Does the wetland discharge directly (i.e., within 1 mi) to a stream, river, lake, or marine water that is on the 303(d) list? Yes = 1 No = 0	1
D 3.2. Is the wetland in a basin or sub-basin where an aquatic resource is on the 303(d) list? Yes = 1 No = 0	1
D 3.3. Has the site been identified in a watershed or local plan as important for maintaining water quality (*answer YES if there is a TMDL for the basin in which the unit is found*)? Yes = 2 No = 0	0
Total for D 3 Add the points in the boxes above	2

Rating of Value If score is: X **2-4 = H** ___ **1 = M** ___ **0 = L** *Record the rating on the first page*

Wetland name or number A

DEPRESSIONAL AND FLATS WETLANDS

Hydrologic Functions - Indicators that the site functions to reduce flooding and stream degradation

D 4.0. Does the site have the potential to reduce flooding and erosion?	
D 4.1. Characteristics of surface water outflows from the wetland: Wetland is a depression or flat depression with no surface water leaving it (no outlet) points = 4 Wetland has an intermittently flowing stream or ditch, OR highly constricted permanently flowing outlet points = 2 Wetland is a flat depression (QUESTION 7 on key), whose outlet is a permanently flowing ditch points = 1 Wetland has an unconstricted, or slightly constricted, surface outlet that is permanently flowing points = 0	Ø
D 4.2. Depth of storage during wet periods: *Estimate the height of ponding above the bottom of the outlet. For wetlands with no outlet, measure from the surface of permanent water or if dry, the deepest part.* Marks of ponding are 3 ft or more above the surface or bottom of outlet points = 7 Marks of ponding between 2 ft to < 3 ft from surface or bottom of outlet points = 5 Marks are at least 0.5 ft to < 2 ft from surface or bottom of outlet points = 3 The wetland is a "headwater" wetland points = 3 Wetland is flat but has small depressions on the surface that trap water points = 1 Marks of ponding less than 0.5 ft (6 in) points = 0	Ø
D 4.3. Contribution of the wetland to storage in the watershed: *Estimate the ratio of the area of upstream basin contributing surface water to the wetland to the area of the wetland unit itself.* The area of the basin is less than 10 times the area of the unit points = 5 The area of the basin is 10 to 100 times the area of the unit points = 3 The area of the basin is more than 100 times the area of the unit points = 0 Entire wetland is in the Flats class points = 5	5
Total for D 4 Add the points in the boxes above	5

Rating of Site Potential If score is: ___ **12-16 = H** ___ **6-11 = M** X **0-5 = L** *Record the rating on the first page*

D 5.0. Does the landscape have the potential to support hydrologic functions of the site?	
D 5.1. Does the wetland receive stormwater discharges? Yes = 1 No = 0	Ø
D 5.2. Is >10% of the area within 150 ft of the wetland in land uses that generate excess runoff? Yes = 1 No = 0	1
D 5.3. Is more than 25% of the contributing basin of the wetland covered with intensive human land uses (residential at >1 residence/ac, urban, commercial, agriculture, etc.)? Yes = 1 No = 0	1
Total for D 5 Add the points in the boxes above	2

Rating of Landscape Potential If score is: ___ **3 = H** X **1 or 2 = M** ___ **0 = L** *Record the rating on the first page*

D 6.0. Are the hydrologic functions provided by the site valuable to society?	
D 6.1. The unit is in a landscape that has flooding problems. *Choose the description that best matches conditions around the wetland unit being rated. Do not add points. Choose the highest score if more than one condition is met.* The wetland captures surface water that would otherwise flow down-gradient into areas where flooding has damaged human or natural resources (e.g., houses or salmon redds): • Flooding occurs in a sub-basin that is immediately down-gradient of unit. points = 2 • Surface flooding problems are in a sub-basin farther down-gradient. points = 1 Flooding from groundwater is an issue in the sub-basin. points = 1 The existing or potential outflow from the wetland is so constrained by human or natural conditions that the water stored by the wetland cannot reach areas that flood. *Explain why* Culvert set high & controls outflow & storage points = 0 There are no problems with flooding downstream of the wetland. points = 0	Ø
D 6.2. Has the site been identified as important for flood storage or flood conveyance in a regional flood control plan? Yes = 2 No = 0	Ø
Total for D 6 Add the points in the boxes above	Ø

Rating of Value If score is: ___ **2-4 = H** ___ **1 = M** X **0 = L** *Record the rating on the first page*

Wetland name or number _____

These questions apply to wetlands of all HGM classes.

HABITAT FUNCTIONS - Indicators that site functions to provide important habitat

H 1.0. Does the site have the potential to provide habitat?

H 1.1. Structure of plant community: *Indicators are Cowardin classes and strata within the Forested class.* Check the Cowardin plant classes in the wetland. *Up to 10 patches may be combined for each class to meet the threshold of ¼ ac or more than 10% of the unit if it is smaller than 2.5 ac. Add the number of structures checked.*

____Aquatic bed	4 structures or more: points = 4
____Emergent	3 structures: points = 2
_X_Scrub-shrub (areas where shrubs have > 30% cover)	2 structures: points = 1
____Forested (areas where trees have > 30% cover)	1 structure: points = 0

If the unit has a Forested class, check if:

____The Forested class has 3 out of 5 strata (canopy, sub-canopy, shrubs, herbaceous, moss/ground-cover) that each cover 20% within the Forested polygon

0

H 1.2. Hydroperiods

Check the types of water regimes (hydroperiods) present within the wetland. The water regime has to cover more than 10% of the wetland or ¼ ac to count (*see text for descriptions of hydroperiods*).

____Permanently flooded or inundated	4 or more types present: points = 3
_X_Seasonally flooded or inundated	3 types present: points = 2
____Occasionally flooded or inundated	2 types present: points = 1
____Saturated only	1 type present: points = 0
____Permanently flowing stream or river in, or adjacent to, the wetland	
____Seasonally flowing stream in, or adjacent to, the wetland	
____**Lake Fringe wetland**	**2 points**
____**Freshwater tidal wetland**	**2 points**

0

H 1.3. Richness of plant species

Count the number of plant species in the wetland that cover at least 10 ft^2.

Different patches of the same species can be combined to meet the size threshold and you do not have to name the species. ***Do not include Eurasian milfoil, reed canarygrass, purple loosestrife, Canadian thistle***

If you counted: > 19 species	points = 2
5 - 19 species	points = 1
< 5 species	points = 0

1

H 1.4. Interspersion of habitats

Decide from the diagrams below whether interspersion among Cowardin plants classes (described in H 1.1), or the classes and unvegetated areas (can include open water or mudflats) is high, moderate, low, or none. *If you have four or more plant classes or three classes and open water, the rating is always high.*

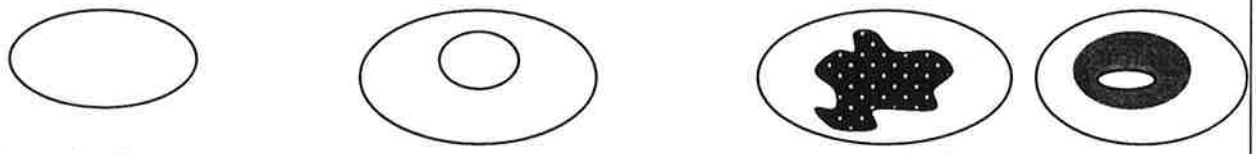

None = 0 points **Low** = 1 point **Moderate** = 2 points

All three diagrams in this row are **HIGH** = 3points

0

Wetland name or number A

H 1.5. Special habitat features: Check the habitat features that are present in the wetland. *The number of checks is the number of points.* ____Large, downed, woody debris within the wetland (> 4 in diameter and 6 ft long). ____Standing snags (dbh > 4 in) within the wetland ____Undercut banks are present for at least 6.6 ft (2 m) **and/or** overhanging plants extends at least 3.3 ft (1 m) over a stream (or ditch) in, or contiguous with the wetland, for at least 33 ft (10 m) ____Stable steep banks of fine material that might be used by beaver or muskrat for denning (> 30 degree slope) OR signs of recent beaver activity are present *(cut shrubs or trees that have not yet weathered where wood is exposed)* ____At least ¼ ac of thin-stemmed persistent plants or woody branches are present in areas that are permanently or seasonally inundated *(structures for egg-laying by amphibians)* ____Invasive plants cover less than 25% of the wetland area in every stratum of plants (*see H 1.1 for list of strata*)	Ø
Total for H 1 — Add the points in the boxes above	1

Rating of Site Potential If score is:___**15-18 = H** ___**7-14 = M** X **0-6 = L** *Record the rating on the first page*

H 2.0. Does the landscape have the potential to support the habitat functions of the site?	
H 2.1. Accessible habitat (include *only habitat that directly abuts wetland unit*). *Calculate:* % undisturbed habitat___ + [(% moderate and low intensity land uses)/2]___ = _____% If total accessible habitat is: > $^1/_3$ (33.3%) of 1 km Polygon — points = 3 20-33% of 1 km Polygon — points = 2 10-19% of 1 km Polygon — points = 1 < 10% of 1 km Polygon — points = 0	Ø
H 2.2. Undisturbed habitat in 1 km Polygon around the wetland. *Calculate:* % undisturbed habitat___ + [(% moderate and low intensity land uses)/2]___ = _____% Undisturbed habitat > 50% of Polygon — points = 3 Undisturbed habitat 10-50% and in 1-3 patches — points = 2 Undisturbed habitat 10-50% and > 3 patches — points = 1 Undisturbed habitat < 10% of 1 km Polygon — points = 0	1
H 2.3. Land use intensity in 1 km Polygon: If > 50% of 1 km Polygon is high intensity land use — points = (- 2) ≤ 50% of 1 km Polygon is high intensity — points = 0	-2
Total for H 2 — Add the points in the boxes above	-1

Rating of Landscape Potential If score is:___**4-6 = H** ___**1-3 = M** X **< 1 = L** *Record the rating on the first page*

H 3.0. Is the habitat provided by the site valuable to society?	
H 3.1. Does the site provide habitat for species valued in laws, regulations, or policies? *Choose only the highest score that applies to the wetland being rated.* Site meets ANY of the following criteria: — points = 2 — It has 3 or more priority habitats within 100 m (see next page) — It provides habitat for Threatened or Endangered species (any plant or animal on the state or federal lists) — It is mapped as a location for an individual WDFW priority species — It is a Wetland of High Conservation Value as determined by the Department of Natural Resources — It has been categorized as an important habitat site in a local or regional comprehensive plan, in a Shoreline Master Plan, or in a watershed plan Site has 1 or 2 priority habitats (listed on next page) within 100 m — points = 1 Site does not meet any of the criteria above — points = 0	1

Rating of Value If score is:___**2 = H** X **1 = M** ___**0 = L** *Record the rating on the first page*

Wetland name or number A

WDFW Priority Habitats

Priority habitats listed by WDFW (see complete descriptions of WDFW priority habitats, and the counties in which they can be found, in: Washington Department of Fish and Wildlife. 2008. Priority Habitat and Species List. Olympia, Washington. 177 pp. http://wdfw.wa.gov/publications/00165/wdfw00165.pdf or access the list from here: http://wdfw.wa.gov/conservation/phs/list/)

Count how many of the following priority habitats are within 330 ft (100 m) of the wetland unit: ***NOTE:*** *This question is independent of the land use between the wetland unit and the priority habitat.*

— **Aspen Stands:** Pure or mixed stands of aspen greater than 1 ac (0.4 ha).

— **Biodiversity Areas and Corridors**: Areas of habitat that are relatively important to various species of native fish and wildlife (*full descriptions in WDFW PHS report*).

— **Herbaceous Balds:** Variable size patches of grass and forbs on shallow soils over bedrock.

— **Old-growth/Mature forests:** Old-growth west of Cascade crest – Stands of at least 2 tree species, forming a multi-layered canopy with occasional small openings; with at least 8 trees/ac (20 trees/ha) > 32 in (81 cm) dbh or > 200 years of age. Mature forests – Stands with average diameters exceeding 21 in (53 cm) dbh; crown cover may be less than 100%; decay, decadence, numbers of snags, and quantity of large downed material is generally less than that found in old-growth; 80-200 years old west of the Cascade crest.

— **Oregon White Oak:** Woodland stands of pure oak or oak/conifer associations where canopy coverage of the oak component is important (*full descriptions in WDFW PHS report p. 158 – see web link above*).

— **Riparian**: The area adjacent to aquatic systems with flowing water that contains elements of both aquatic and terrestrial ecosystems which mutually influence each other.

— **Westside Prairies**: Herbaceous, non-forested plant communities that can either take the form of a dry prairie or a wet prairie (*full descriptions in WDFW PHS report p. 161 – see web link above*).

— **Instream:** The combination of physical, biological, and chemical processes and conditions that interact to provide functional life history requirements for instream fish and wildlife resources.

— **Nearshore**: Relatively undisturbed nearshore habitats. These include Coastal Nearshore, Open Coast Nearshore, and Puget Sound Nearshore. (*full descriptions of habitats and the definition of relatively undisturbed are in WDFW report – see web link on previous page).*

— **Caves:** A naturally occurring cavity, recess, void, or system of interconnected passages under the earth in soils, rock, ice, or other geological formations and is large enough to contain a human.

— **Cliffs:** Greater than 25 ft (7.6 m) high and occurring below 5000 ft elevation.

— **Talus:** Homogenous areas of rock rubble ranging in average size 0.5 - 6.5 ft (0.15 - 2.0 m), composed of basalt, andesite, and/or sedimentary rock, including riprap slides and mine tailings. May be associated with cliffs.

X **Snags and Logs:** Trees are considered snags if they are dead or dying and exhibit sufficient decay characteristics to enable cavity excavation/use by wildlife. Priority snags have a diameter at breast height of > 20 in (51 cm) in western Washington and are > 6.5 ft (2 m) in height. Priority logs are > 12 in (30 cm) in diameter at the largest end, and > 20 ft (6 m) long.

Note: All vegetated wetlands are by definition a priority habitat but are not included in this list because they are addressed elsewhere.

Wetland name or number A

CATEGORIZATION BASED ON SPECIAL CHARACTERISTICS

Wetland Type *Check off any criteria that apply to the wetland. Circle the category when the appropriate criteria are met.*	Category
SC 1.0. Estuarine wetlands Does the wetland meet the following criteria for Estuarine wetlands? — The dominant water regime is tidal, — Vegetated, and — With a salinity greater than 0.5 ppt Yes –Go to **SC 1.1** No= **Not an estuarine wetland**	NO
SC 1.1. Is the wetland within a National Wildlife Refuge, National Park, National Estuary Reserve, Natural Area Preserve, State Park or Educational, Environmental, or Scientific Reserve designated under WAC 332-30-151? Yes = **Category I** No - Go to **SC 1.2**	**Cat. I**
SC 1.2. Is the wetland unit at least 1 ac in size and meets at least two of the following three conditions? — The wetland is relatively undisturbed (has no diking, ditching, filling, cultivation, grazing, and has less than 10% cover of non-native plant species. (If non-native species are *Spartina*, see page 25) — At least ¾ of the landward edge of the wetland has a 100 ft buffer of shrub, forest, or un-grazed or un-mowed grassland. — The wetland has at least two of the following features: tidal channels, depressions with open water, or contiguous freshwater wetlands. Yes = **Category I** No = **Category II**	**Cat. I** **Cat. II**
SC 2.0. Wetlands of High Conservation Value (WHCV) SC 2.1. Has the WA Department of Natural Resources updated their website to include the list of Wetlands of High Conservation Value? Yes – Go to **SC 2.2** No – Go to **SC 2.3** SC 2.2. Is the wetland listed on the WDNR database as a Wetland of High Conservation Value? Yes = **Category I** No = **Not a WHCV** SC 2.3. Is the wetland in a Section/Township/Range that contains a Natural Heritage wetland? http://www1.dnr.wa.gov/nhp/refdesk/datasearch/wnhpwetlands.pdf Yes – **Contact WNHP/WDNR and go to SC 2.4** No = **Not a WHCV** SC 2.4. Has WDNR identified the wetland within the S/T/R as a Wetland of High Conservation Value and listed it on their website? Yes = **Category I** No = **Not a WHCV**	**Cat. I** NO
SC 3.0. Bogs Does the wetland (or any part of the unit) meet both the criteria for soils and vegetation in bogs? *Use the key below.* ***If you answer YES you will still need to rate the wetland based on its functions.*** SC 3.1. Does an area within the wetland unit have organic soil horizons, either peats or mucks, that compose 16 in or more of the first 32 in of the soil profile? Yes – Go to **SC 3.3** No – Go to **SC 3.2** SC 3.2. Does an area within the wetland unit have organic soils, either peats or mucks, that are less than 16 in deep over bedrock, or an impermeable hardpan such as clay or volcanic ash, or that are floating on top of a lake or pond? Yes – Go to **SC 3.3** No = **Is not a bog** SC 3.3. Does an area with peats or mucks have more than 70% cover of mosses at ground level, AND at least a 30% cover of plant species listed in Table 4? Yes = **Is a Category I bog** No – Go to **SC 3.4** **NOTE:** If you are uncertain about the extent of mosses in the understory, you may substitute that criterion by measuring the pH of the water that seeps into a hole dug at least 16 in deep. If the pH is less than 5.0 and the plant species in Table 4 are present, the wetland is a bog. SC 3.4. Is an area with peats or mucks forested (> 30% cover) with Sitka spruce, subalpine fir, western red cedar, western hemlock, lodgepole pine, quaking aspen, Engelmann spruce, or western white pine, AND any of the species (or combination of species) listed in Table 4 provide more than 30% of the cover under the canopy? Yes = **Is a Category I bog** No = **Is not a bog**	NO **Cat. I**

Wetland name or number A

SC 4.0. Forested Wetlands Does the wetland have at least 1 contiguous acre of forest that meets one of these criteria for the WA Department of Fish and Wildlife's forests as priority habitats? ***If you answer YES you will still need to rate the wetland based on its functions.*** — **Old-growth forests** (west of Cascade crest): Stands of at least two tree species, forming a multi-layered canopy with occasional small openings; with at least 8 trees/ac (20 trees/ha) that are at least 200 years of age OR have a diameter at breast height (dbh) of 32 in (81 cm) or more. — **Mature forests** (west of the Cascade Crest): Stands where the largest trees are 80- 200 years old OR the species that make up the canopy have an average diameter (dbh) exceeding 21 in (53 cm). Yes = **Category I** No = **Not a forested wetland for this section**	NO **Cat. I**
SC 5.0. Wetlands in Coastal Lagoons Does the wetland meet all of the following criteria of a wetland in a coastal lagoon? — The wetland lies in a depression adjacent to marine waters that is wholly or partially separated from marine waters by sandbanks, gravel banks, shingle, or, less frequently, rocks — The lagoon in which the wetland is located contains ponded water that is saline or brackish (> 0.5 ppt) during most of the year in at least a portion of the lagoon *(needs to be measured near the bottom)* Yes – Go to **SC 5.1** No = **Not a wetland in a coastal lagoon** SC 5.1. Does the wetland meet all of the following three conditions? — The wetland is relatively undisturbed (has no diking, ditching, filling, cultivation, grazing), and has less than 20% cover of aggressive, opportunistic plant species (see list of species on p. 100). — At least ¾ of the landward edge of the wetland has a 100 ft buffer of shrub, forest, or un-grazed or un-mowed grassland. — The wetland is larger than $^{1}/_{10}$ ac (4350 ft^2) Yes = **Category I** No = **Category II**	**Cat. I** **Cat. II** NO
SC 6.0. Interdunal Wetlands Is the wetland west of the 1889 line (also called the Western Boundary of Upland Ownership or WBUO)? ***If you answer yes you will still need to rate the wetland based on its habitat functions.*** In practical terms that means the following geographic areas: — Long Beach Peninsula: Lands west of SR 103 — Grayland-Westport: Lands west of SR 105 — Ocean Shores-Copalis: Lands west of SR 115 and SR 109 Yes – Go to **SC 6.1** No = **not an interdunal wetland for rating** SC 6.1. Is the wetland 1 ac or larger and scores an 8 or 9 for the habitat functions on the form (rates H,H,H or H,H,M for the three aspects of function)? Yes = **Category I** No – Go to **SC 6.2** SC 6.2. Is the wetland 1 ac or larger, or is it in a mosaic of wetlands that is 1 ac or larger? Yes = **Category II** No – Go to **SC 6.3** SC 6.3. Is the unit between 0.1 and 1 ac, or is it in a mosaic of wetlands that is between 0.1 and 1 ac? Yes = **Category III** No = **Category IV**	NO **Cat I** **Cat. II** **Cat. III** **Cat. IV**
Category of wetland based on Special Characteristics If you answered No for all types, enter "Not Applicable" on Summary Form	N/A

Appendix B

Site Development Plan Sheets - 2016
Land Development Consultants, Inc.

Copyright © 2016 Talasaea Consultants, Inc.

A PORTION OF THE NE 1/4 OF SECTION 31, TWP. 28 N., RGE. 5 E., W.M., CITY OF MILL CREEK, SNOHOMISH COUNTY, WASHINGTON

ARENA SPORTS
PRELIMINARY PLANS

LEGEND AND ABBREVIATIONS

EXISTING SYMBOLS

SYMBOL	DESCRIPTION
	EXISTING REBAR W/CAP, AS NOTED
	FOUND CONCRETE MONUMENT AS NOTED
	STORM DRAIN MANHOLE
	INVERT/CULVERT
	CATCH BASIN
	WATER VALVE
	FIRE HYDRANT
	WATER METER
	LUMINAIRE
	SANITARY SEWER MANHOLE
	SANITARY SEWER CLEAN OUT
	SIGN POST
	UTILITY/POWER POLE
	GUY ANCHOR
	GAS VALVE
	POWER VAULT
	WATER VAULT
	CATV/TELEPHONE RISER
	CONIFEROUS TREE

ABBREVIATIONS

CB	CATCH BASIN
℄	CENTERLINE
CMP	CORRUGATED METAL PIPE
CP	CONCRETE PIPE
EL	ELEVATION
EXIST.	EXISTING
FL	FLOWLINE
IE	INVERT ELEVATION
LCPE	LINED CORRUGATED POLYETHYLENE PIPE
PL	PROPERTY LINE
PP	POWER POLE
PVC	POLYVINYL CHLORIDE PIPE
R/W	RIGHT-OF-WAY
STA	STATION
SD	STORM DRAIN
SS	SANITARY SEWER
SSMH	SANITARY SEWER MANHOLE
SWPE	SOLID WALL POLYETHYLENE PIPE
TYP	TYPICAL
TBR	TO BE REMOVED

PROPOSED STORM SYMBOLS

SYMBOL	DESCRIPTION
	SD CAP
	TYPE 1 CATCH BASIN, GRATED LID
	TYPE 1 CATCH BASIN, SOLID LID
	TYPE 2 CATCH BASIN, GRATED LID
	TYPE 2 CATCH BASIN, SOLID LID
	BEEHIVE MANHOLE COVER
	SQUARE YARD DRAIN
	ROUND YARD DRAIN
	STORM CLEAN OUT
	STORM PIPE

PROPOSED SEWER SYMBOLS

SYMBOL	DESCRIPTION
	SEWER CAP
	SEWER CLEANOUT
	SEWER MANHOLE
	SEWER PIPE

PROPOSED WATER SYMBOLS

SYMBOL	DESCRIPTION
	WATER CAP
	CONCRETE BLOCKING
	BUTTERFLY VALVE
	11° BEND
	45° BEND
	90° BEND
	22° BEND
	VALVE
	HYDRANT ASSEMBLY
	BLOW-OFF VALVE
	REDUCER
	AIR-VAC ASSEMBLY
	WATER METER
	WATER PIPE

PROPOSED SURVEY SYMBOLS

SYMBOL	DESCRIPTION
	SURVEY MONUMENT IN PROPOSED ROAD

PROJECT INFORMATION

SITE ADDRESS:	13518 BOTHELL-EVERETT HWY, BOTHELL, WA 98012
TAX PARCELS:	28053100104000, 28053100103200, 28053100103400
SITE AREA:	293,167 SF 6.73 AC
WATER:	SILVER LAKE WATER AND SEWER DISTRICT
SEWER:	SILVER LAKE WATER AND SEWER DISTRICT
POWER:	SNOHOMISH COUNTY PUD
TELEPHONE:	VERIZON
GAS:	PUGET SOUND ENERGY
CABLE:	COMCAST

CONTACT LIST

OWNER/APPLICANT:
CSA REAL ESTATE, LLC
9040 WILLOWS ROAD, SUITE 102
REDMOND, WA 98052
CONTACT: DON CROWE
PHONE: (206) 849-6285
EMAIL: dcrowe@arenasports.net

ENGINEER:
LDC, INC.
14201 NE 200TH ST #100
WOODINVILLE, WASHINGTON 98072
CONTACT: MARK VILLWOCK, P.E.
PHONE: (425) 806-1869
FAX: (425) 482-2893
EMAIL: MVILLWOCK@LDCCORP.COM

GEOTECH:
ROBINSON NOBLE
17625 130TH AVE NE, SUITE 102
WOODENVILLE, WA 98072
CONTACT: RICK B. POWELL, PE
PHONE: (425) 488-0599

SURVEYOR:
CORNERSTONE ENGINEERING, INC.
116928 WOODINVILLE-REDMOND RD
SUITE 210
WOODINVILLE, WASHINGTION 98072
CONTACT: JEFF MOOG, PLS
PHONE: (425) 487-1732
FAX: (425) 487-1734
EMAIL: cei@cornerstone-engr.com

SURVEYOR:
LDC, INC.
14201 NE 200TH ST, STE 100
WOODINVILLE WASHINGTON 98072
CONTACT: MICHAEL MERRITT, PLS
PHONE: (425) 806-1869
FAX: (425) 482-2893
EMAIL: michaelm@ldccorp.com

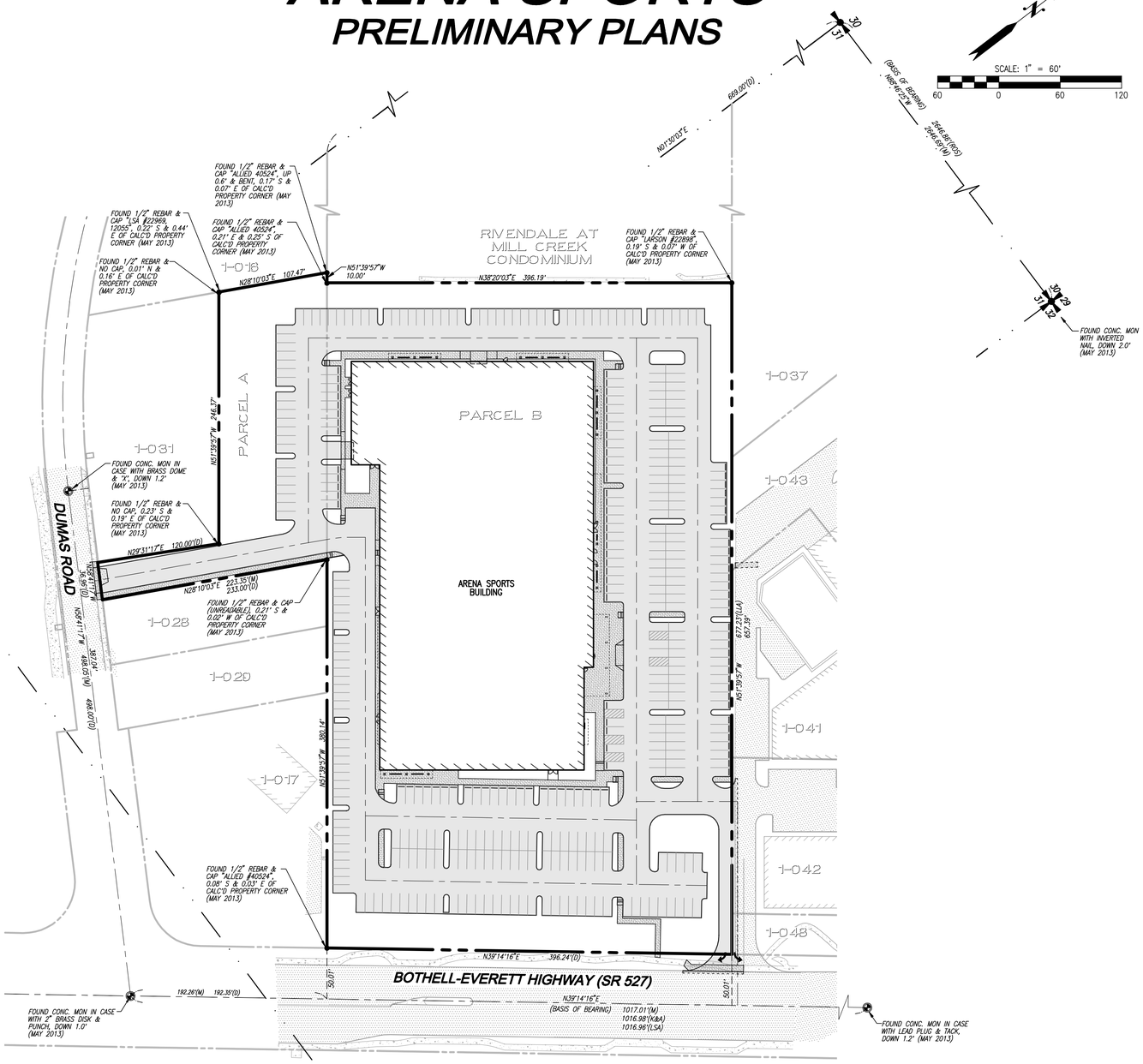

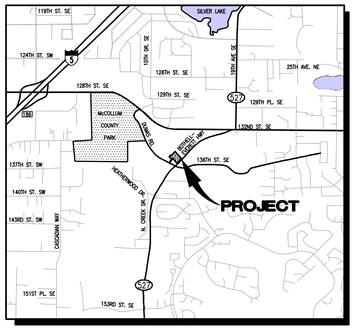

VICINITY MAP
NOT TO SCALE

SURVEY INFORMATION

LEGAL DESCRIPTION

PARCEL A
THAT PORTION OF THE NORTHEAST QUARTER OF SECTION 31, TOWNSHIP 28 NORTH, RANGE 5 EAST W.M., RECORDS OF SNOHOMISH COUNTY, WASHINGTON, DESCRIBED AS FOLLOWS:

BEGINNING 669.00 FEET SOUTH OF THE NORTHWEST CORNER OF SAID SUBDIVISION; THENCE SOUTH 53°10'00" EAST 300.00 FEET TO THE TRUE POINT OF BEGINNING; THENCE CONTINUING SOUTH 53°10'00" EAST 281.00 FEET; THENCE SOUTH 26°40'00" WEST 233.00 FEET TO THE WESTERLY LINE OF DUMAS ROAD; THENCE NORTH 63°20'00" WEST ALONG SAID WESTERLY LINE TO A POINT SOUTH 26°40'00" WEST FROM THE TRUE POINT OF BEGINNING; THENCE NORTH 26°40'00" EAST TO THE TRUE POINT OF BEGINNING;

EXCEPT THAT PORTION THEREOF, DESCRIBED AS FOLLOWS:

COMMENCING AT THE NORTH QUARTER OF SAID SECTION 31; THENCE SOUTH ALONG THE SECTION CENTERLINE, 669.00 FEET; THENCE SOUTH 53°10'00" EAST FOR 1011.00 FEET TO THE CENTERLINE OF EVERETT-BOTHELL WAY HIGHWAY (SR 527); THENCE SOUTH 37°44'15" WEST ALONG SAID CENTERLINE, 192.35 FEET TO THE CENTERLINE INTERSECTION WITH DUMAS ROAD; THENCE NORTH 60°10'54" WEST ALONG SAID CENTERLINE 498.00 FEET; THENCE NORTH 29°39'15" EAST 20.00 FEET TO THE NORTHERLY RIGHT OF WAY LINE OF SAID DUMAS ROAD AND THE TRUE POINT OF BEGINNING; THENCE SOUTH 60°10'45" EAST ALONG SAID NORTHERLY LINE, 72.91 FEET; THENCE NORTH 28°01'14" EAST 120.00 FEET; THENCE NORTH 53°10'00" WEST TO AN INTERSECTION WITH THE FOLLOWING DESCRIBED LINE;

BEGINNING AT THE NORTHWEST CORNER OF THE NORTHEAST QUARTER OF SAID SECTION 31; THENCE SOUTH ALONG THE WEST LINE THEREOF, 669.00 FEET; THENCE SOUTH 53°10'00" EAST 300.00 FEET TO THE TRUE POINT OF BEGINNING OF SAID LINE DESCRIPTION; THENCE SOUTH 26°40'00" WEST 225.00 FEET, MORE OR LESS, TO THE NORTHERLY LINE OF DUMAS ROAD AND THE TERMINUS OF SAID DESCRIBED LINE; THENCE SOUTH 26°40'00" WEST TO THE NORTHERLY LINE OF DUMAS ROAD; THENCE SOUTHEASTERLY ALONG SAID NORTHERLY LINE TO THE TRUE POINT OF BEGINNING.

SITUATE IN THE COUNTY OF SNOHOMISH, STATE OF WASHINGTON.

PARCEL B
PARCEL B OF CITY OF MILL CREEK LOT LINE ADJUSTMENT NO. 96-42 RECORDED UNDER AUDITOR'S FILE NUMBER 9609235001, BEING MORE PARTICULARLY DESCRIBED AS FOLLOWS:

THAT PORTION OF THE NORTHEAST QUARTER OF SECTION 31, TOWNSHIP 28 NORTH, RANGE 5 EAST, W.M., DESCRIBED AS FOLLOWS:

COMMENCING AT THE NORTH QUARTER CORNER OF SAID SECTION 31; THENCE SOUTH 00°12'33" EAST ALONG THE WEST LINE OF SAID NORTHEAST QUARTER, 669.00 FEET TO THE SOUTHWEST CORNER OF THAT CERTAIN TRACT CONVEYED TO WAKEFIELD MILL CREEK L.L.C., BY STATUTORY WARRANTY DEED RECORDED UNDER RECORDING NO. 9609230196;
THENCE SOUTH 53°22'33" EAST, ALONG THE SOUTHERLY LINE OF SAID WAKEFIELD MILL CREEK, L.L.C. TRACT, A DISTANCE OF 310 FEET TO THE TRUE POINT OF BEGINNING; THENCE NORTH 36°37'27" EAST, A DISTANCE OF 396.19 FEET TO A POINT ON THE NORTHEASTERLY LINE OF THAT CERTAIN TRACT CONVEYED TO CLINTON E. CARNELL AND CECILIA A. CARNELL, HIS WIFE, BY DEED RECORDED UNDER RECORDING NO. 9405100186;
THENCE SOUTH 53°22'33" EAST ALONG SAID NORTHEASTERLY LINE, A DISTANCE OF 677.23 FEET TO THE NORTHWEST MARGIN OF THE BOTHELL-EVERETT HIGHWAY (S.R. 527);
THENCE SOUTH 37°31'40" WEST ALONG SAID NORTHWEST MARGIN 396.24 FEET TO THE SOUTHEAST CORNER OF THAT CERTAIN TRACT CONVEYED TO CLINTON E. CARNELL AND CECILIA A. CARNELL, HIS WIFE, BY DEED RECORDED UNDER RECORDING NO. 9405100185;
THENCE NORTH 53°22'33" WEST ALONG THE SOUTHWEST LINE OF SAID CARNELL TRACT, A DISTANCE OF 670.98 FEET TO THE TRUE POINT OF BEGINNING;

EXCEPT THAT PORTION THEREOF CONVEYED TO THE STATE OF WASHINGTON BY WARRANTY DEED RECORDED UNDER RECORDING NO. 9903050785.

SITUATE IN THE COUNTY OF SNOHOMISH, STATE OF WASHINGTON.

VERTICAL DATUM
NAVD-88

BENCHMARK
SNOHOMISH COUNTY SURVEY CONTROL POINT NO. 1642
ELEVATION = 408.92 FEET

EQUIPMENT
THIS SURVEY WAS PERFORMED WITH A TOPCON GPT 2003 ELECTRONIC THEODOLITE READING DIRECT TO 3 SECONDS OF ARC AND MEASURING DISTANCE ±(3+(2PPM X D)) mm. & TOPCON LEGANT/LEGACY - HIPER GPS RECEIVERS MEASURING DISTANCE ±(3+(1PPM X D)) mm. NGS BASELINE COMPARED APRIL 2004.

TABLE OF CONTENTS

1 COVER SHEET
2 PRELIMINARY TESC PLAN
3 PRELIMINARY TESC DETAILS
4 PRELIMINARY SITE PLAN
5 PRELIMINARY GRADING AND UTILITIES PLAN
6 TREE RETENTION PLAN
L-1-L-6 LANDSCAPE PLANS

BOUNDARY DISCLAIMER
THE BOUNDARY SURVEY WAS PERFORMED BY LDC, INC. IN MAY 2013. ANY CHANGES TO THE SITE AFTER THIS DATE WILL NOT BE REFLECTED IN THE PLANS. ANY DISCREPANCIES FOUND BETWEEN WHAT IS SHOWN ON THE PLANS AND WHAT IS NOTED IN THE FIELD SHOULD BE BROUGHT IMMEDIATELY TO THE ATTENTION OF THE ENGINEER.

TOPOGRAPHIC DISCLAIMER
TOPOGRAPHIC SURVEY INFORMATION CONTAINED ON THESE PLANS HAS BEEN PROVIDED BY CORNERSTONE ENGINEERING, INC. LDC, INC. (LAND DEVELOPMENT CONSULTANTS, INC.) ASSUMES NO LIABILITY AS TO THE ACCURACY AND COMPLETENESS OF THIS DATA. ANY DISCREPANCIES FOUND BETWEEN WHAT IS SHOWN ON THE PLANS AND WHAT IS NOTED IN THE FIELD SHOULD BE BROUGHT IMMEDIATELY TO THE ATTENTION OF THE ENGINEER.

Call 2 Business Days Before You Dig
811 or 1-800-424-5555
Utilities Underground Location Center

REVISIONS

NO.	DATE	DESCRIPTION	BY

LDC
THE CIVIL ENGINEERING GROUP
Engineering
Structural
Planning
Survey
14201 NE 200th St., #100
Woodinville, WA 98072
Ph. 425.806.1869
Fx. 425.482.2893
www.LDCcorp.com

CSA REAL ESTATE, LLC

ARENA SPORTS MILL CREEK
COVER SHEET

MARK E. VILLWOCK
STATE OF WASHINGTON
40908
REGISTERED PROFESSIONAL ENGINEER
9-27-16

JOB NUMBER:	16-115
DRAWING NAME:	16115P-CS01
DESIGNER:	MEV
DRAFTING BY:	BPC
DATE:	9-27-16
SCALE:	1"=60'
JURISDICTION:	MILL CREEK

CS-01
SHEET 1 OF 6

Drawing: P:\2016\16-115 Mill Creek Commercial\Drawings\Preliminary\16115P-CS01.dwg Plotted: Sep 27, 2016 - 3:35pm

A PORTION OF THE NE 1/4 OF SECTION 31, TWP. 28 N., RGE. 5 E., W.M., CITY OF MILL CREEK, SNOHOMISH COUNTY, WASHINGTON

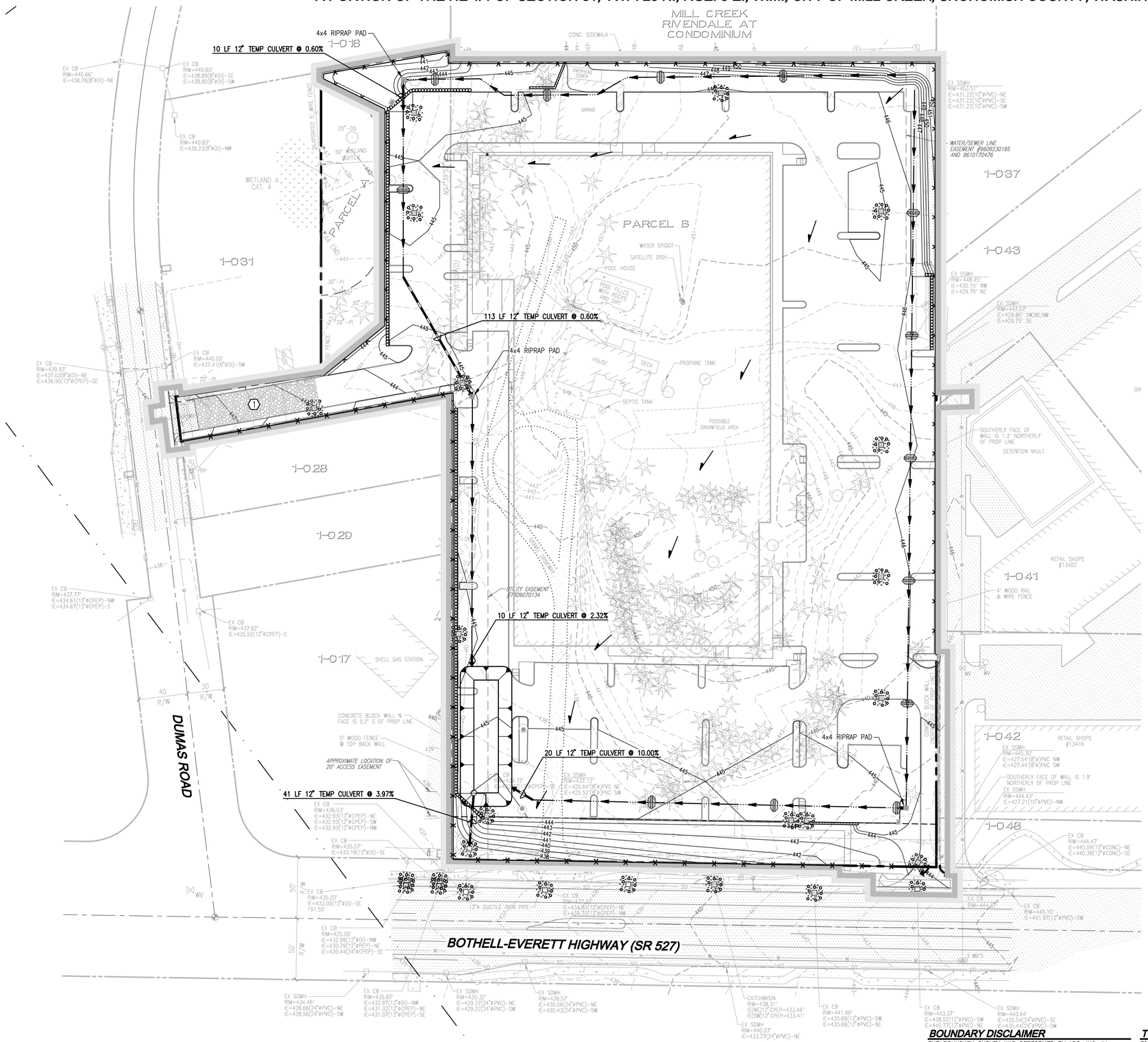

SCALE: 1" = 40'

40 0 40 80

LEGEND

- CLEARING AREA / PROTECTED AREA — CLEARING LIMITS
- SILT FENCE
- CONVEYANCE SWALE
- ROCK CONSTRUCTION ENTRANCE
- CATCH BASIN PROTECTION
- TESC POND
- PRE DEVELOPMENT DRAINAGE PATTERN
- POST DEVELOPMENT DRAINAGE PATTERN
- INSTALL CHECK DAM EVERY 100' OR 2' OF ELEVATION CHANGE

TESC POND	
BOTTOM ELEVATION	434
BOTTOM AREA (SF)	2,046
TOP ELEVATION	438
TOP AREA (SF)	5310
SIDE SLOPES	3:1
OVERFLOW ELEV.	434.5
OUTLET INVERT ELEV.	434.5
ORIFICE INVERT ELEV.	434
ORIFICE SIZE	3"ø

BOUNDARY DISCLAIMER

THE BOUNDARY SURVEY WAS PERFORMED BY LDC, INC. IN MAY 2013. ANY CHANGES TO THE SITE AFTER THIS DATE WILL NOT BE REFLECTED IN THE PLANS. ANY DISCREPANCIES FOUND BETWEEN WHAT IS SHOWN ON THE PLANS AND WHAT IS NOTED IN THE FIELD SHOULD BE BROUGHT IMMEDIATELY TO THE ATTENTION OF THE ENGINEER.

TOPOGRAPHIC DISCLAIMER

TOPOGRAPHIC SURVEY INFORMATION CONTAINED ON THESE PLANS HAS BEEN PROVIDED BY CORNERSTONE ENGINEERING, INC. LDC, INC. (LAND DEVELOPMENT CONSULTANTS, INC.) ASSUMES NO LIABILITY AS TO THE ACCURACY AND COMPLETENESS OF THIS DATA. ANY DISCREPANCIES FOUND BETWEEN WHAT IS SHOWN ON THE PLANS AND WHAT IS NOTED IN THE FIELD SHOULD BE BROUGHT IMMEDIATELY TO THE ATTENTION OF THE ENGINEER.

Call 2 Business Days Before You Dig
811 or 1-800-424-5555
Utilities Underground Location Center

REVISIONS

NO.	DATE	DESCRIPTION	BY

LDC
THE CIVIL ENGINEERING GROUP
Engineering Structural Planning Survey
14201 NE 202th St., #100
Woodinville, WA 98072
Ph. 425.805.1869
Fx. 425.482.2863
www.LDCcorp.com

CSA REAL ESTATE, LLC

ARENA SPORTS MILL CREEK

PRELIMINARY TESC PLAN

MARK E. VILLINOAR — STATE OF WASHINGTON — 40908 — REGISTERED PROFESSIONAL ENGINEER

JOB NUMBER:	16-115
DRAWING NAME:	16115P-ER-PL
DESIGNER:	MEV
DRAFTING BY:	BPC
DATE:	9-27-16
SCALE:	AS NOTED
JURISDICTION:	MILL CREEK

ER-01

SHEET 2 OF 6

Drawing: P:\2016\16-115 Mill Creek Commercial\Drawings\Preliminary\16115P-ER-PL.dwg Plotted: Sep 27, 2016 - 3:38pm

A PORTION OF THE NE 1/4 OF SECTION 31, TWP. 28 N., RGE. 5 E., W.M., CITY OF MILL CREEK, SNOHOMISH COUNTY, WASHINGTON

GENERAL PLAN NOTES

1. ALL WORK AND MATERIALS SHALL BE ACCORDING TO THE LATEST ADDITION OF "STANDARD SPECIFICATIONS FOR ROAD, BRIDGE, AND MUNICIPAL CONSTRUCTION" PREPARED BY WASHINGTON STATE DEPARTMENT OF TRANSPORTATION (WSDOT), CITY OF MILL CREEK STANDARD PLANS, AND ANY CONDITIONS OF APPROVAL. IT SHALL BE THE SOLE RESPONSIBILITY OF THE APPLICANT AND THE PROFESSIONAL CIVIL ENGINEER TO CORRECT ANY ERROR, OMISSIONS, OR VARIATION FROM THE ABOVE REQUIREMENTS FOUND IN THESE PLANS. ALL CORRECTIONS SHALL BE AT NO ADDITIONAL COST OR LIABILITY TO THE CITY OF MILL CREEK.
2. ALL WORK WITHIN THE SITE SHALL BE SUBJECT TO THE INSPECTION OF THE CITY ENGINEER OR DESIGNATED REPRESENTATIVE.
3. PRIOR TO BEGINNING ROAD CONSTRUCTION, THE APPLICANT, THEIR ENGINEER, AND ROAD CONTRACTOR SHALL MEET WITH THE DEPARTMENT OF PUBLIC WORKS FOR A PRE-CONSTRUCTION MEETING.
4. A COPY OF THESE APPROVED PLANS MUST BE ON THE SITE WHENEVER CONSTRUCTION IS IN PROGRESS.
5. PRIOR TO ANY SITE CONSTRUCTION THAT INCLUDES CLEARING/LOGGING OR GRADING THE SITE/LOT CLEARING LIMITS SHALL BE LOCATED AND IDENTIFIED BY THE PROJECT SURVEYOR/ENGINEER AS REQUIRED BY THESE PLANS AND APPROVED BY THE CITY.
6. THE TEMPORARY EROSION/SEDIMENTATION CONTROL BMP'S SHALL BE INSTALLED PRIOR TO ANY GRADING OR EXTENSIVE LAND CLEARING IN ACCORDANCE WITH APPROVED CONSTRUCTION STORMWATER POLLUTION PREVENTION PLAN (SWPPP). THESE BMP'S MUST BE SATISFACTORILY MAINTAINED UNTIL CONSTRUCTION AND LANDSCAPING IS COMPLETED AND THE POTENTIAL FOR ON-SITE EROSION HAS PASSED.
7. PUBLIC STREETS SHALL BE CLEANED ONCE PER DAY OR AS DIRECTED BY THE CITY. FLUSHING OF STREETS WITH WATER WILL NOT BE ALLOWED.
8. LOCATIONS OF EXISTING UTILITIES ARE APPROXIMATE. THE CONTRACTOR SHALL BE RESPONSIBLE FOR VERIFYING THE LOCATIONS OF EXISTING UTILITIES PRIOR TO CONSTRUCTION. UTILITIES SHOWN HERE ARE FOR THE PURPOSES OF ASSISTING THE CONTRACTOR IN LOCATING SAID UTILITIES. CONTRACTOR SHALL CONTACT UNDERGROUND UTILITIES LOCATION CENTER (1-800-424-5555) 48 HOURS PRIOR TO BEGINNING OF CONSTRUCTION AND OBTAIN ON-SITE UTILITY LOCATIONS.
9. THE CONTRACTOR SHALL COMPLY WITH ALL OTHER NECESSARY PERMITS AND REQUIREMENTS BY THE CITY OF MILL CREEK GOVERNING AUTHORITY/AGENCY.
10. UNLESS OTHERWISE APPROVED BY THE CITY ENGINEER, FROM OCTOBER 1 THROUGH APRIL 30, NO SOILS SHALL REMAIN EXPOSED AND UNWORKED FOR MORE THAN 2 DAYS AND FROM MAY 1 THROUGH SEPTEMBER 30, NO SOILS SHALL REMAIN EXPOSED AND UNWORKED FOR MORE THAN 7 DAYS. ANY UNWORKED SOIL SHALL BE STABILIZED WITH A CITY APPROVED BEST MANAGEMENT PRACTICE (BMP).

STORM DRAINAGE NOTES

1. ALL PIPE SHALL BE PLACED ON STABLE EARTH, OR IF IN THE OPINION OF THE CITY ENGINEER, THE EXISTING FOUNDATION IS UNSATISFACTORY, AND THEN IT SHALL BE EXCAVATED BELOW GRADE AND BACK-FILLED PER STANDARD PLAN STM 01.
2. TRENCH BACK FILL OF NEW UTILITIES AND STORM DRAINAGE FACILITIES SHALL BE COMPACTED TO 95% MAXIMUM DENSITY (MODIFIED PROCTOR) UNDER ROADWAYS AND SIDEWALKS AND 90% MAXIMUM DENSITY (MODIFIED PROCTOR) OFF ROADWAYS.
3. ALL CATCH BASINS TO BE TYPE I UNLESS OTHERWISE NOTED.
4. ALL CATCH BASINS WITH A DEPTH OVER 5.0 FEET TO THE FLOW LINE SHALL BE TYPE II.
5. ALL TYPE II CATCH BASINS AND ALL INLETS AND CATCH BASINS OUTSIDE OF PUBLIC RIGHT OF WAY SHALL HAVE SOLID LOCKING LIDS UNLESS OTHERWISE APPROVED BY THE CITY. CATCH BASINS OUTSIDE THE RIGHT OF WAY COLLECTING SURFACE WATER SHALL HAVE LOCKING GRATES.
6. STANDARD LADDER STEPS SHALL BE PROVIDED IN ALL CATCH BASINS/MANHOLES EXTENDING 5 FEET IN DEPTH.
7. CATCH BASIN FRAME AND GRATES SHALL BE DUCTILE IRON (HS-25 RATING) VANED GRATE (OLYMPIC FOUNDRY ITEM NUMBER SM50VG OR APPROVED EQUAL). THROUGH CURB INLETS SHALL BE 18"X24" DUCTILE IRON-DIAGONAL SLOT GRATE WITH 9" HIGH DIAMOND PLATE HOOD, AND HS-25 RATING (OLYMPIC FOUNDRY ITEM NUMBER SM50VG OR APPROVED EQUAL).
8. THE CONTRACTOR SHALL BE RESPONSIBLE FOR ADJUSTING ALL INLET, AND CATCH BASIN FRAMES AND GRATES JUST PRIOR TO PAVING. DURING OVERLAY PROJECTS, ALL MANHOLES, VALVES, AND MONUMENTS SHALL BE ADJUSTED AFTER PAVING.
9. PRIOR TO SIDEWALK CONSTRUCTION, CONSTRUCT THE LOT DRAINAGE AND/OR STUB OUTS BEHIND SIDEWALK DRAINS AS REQUIRED. POSITIVE DRAINAGE IS TO BE PROVIDED WHERE FEASIBLE WITH CONNECTION TO STORM DRAIN. STUBOUTS SHALL BE MARKED WITH 2"X4" AND LABELED "STORM."
10. STORM WATER RETENTION/DETENTION FACILITIES, CONTROL STRUCTURES, STORM DRAINAGE PIPES AND CATCH BASINS SHALL BE JETTED AND CLEANED PRIOR TO ACCEPTANCE.
11. PIPE SPECIFICATION: ALL STORM DRAIN PIPES SHALL BE 12" MIN. DIAMETER. PIPE MATERIAL, JOINTS AND PROTECTIVE TREATMENT, SHALL BE IN ACCORDANCE WITH WSDOT STANDARD SPECIFICATIONS, SECTION 9.05 AND AASHTO AND ASTM DESIGNATIONS AS NOTED BELOW.

MATERIALS ALLOWED FOR STORM DRAIN LINES:

- PLAIN CONCRETE PIPE (CP)
- REINFORCED CONCRETE PIPE (RCP)
- ALUMINUM SPIRAL RI PIPE (ASRP)
- ASTM D3034 PVC
- HIGH DENSITY POLYETHYLENE PIPE (HDPE) SMOOTH INTERIOR -DUAL AND TRIPLE WALL (12"-24" PIPE SHALL BE DUAL WALL)

MATERIALS ALLOWED FOR 6" ROOF DRAIN LINES.

- SDR35 SEWER PIPE (ASTM D3034 PVC)

ALLOWABLE JOINTS:

- CONCRETE PIPE SHALL BE RUBBER GASKETED.
- SPIRAL RIB PIPE SHALL BE "HAT BANDED" WITH NEOPRENE GASKETS.
- PVC PIPE SHALL BE RUBBER GASKETED.
- HDPE SHALL BE BELL-AND-SPIGOT, CLEATED BELL, OR SPLIT, INTERNAL AND SNAP COUPLERS.

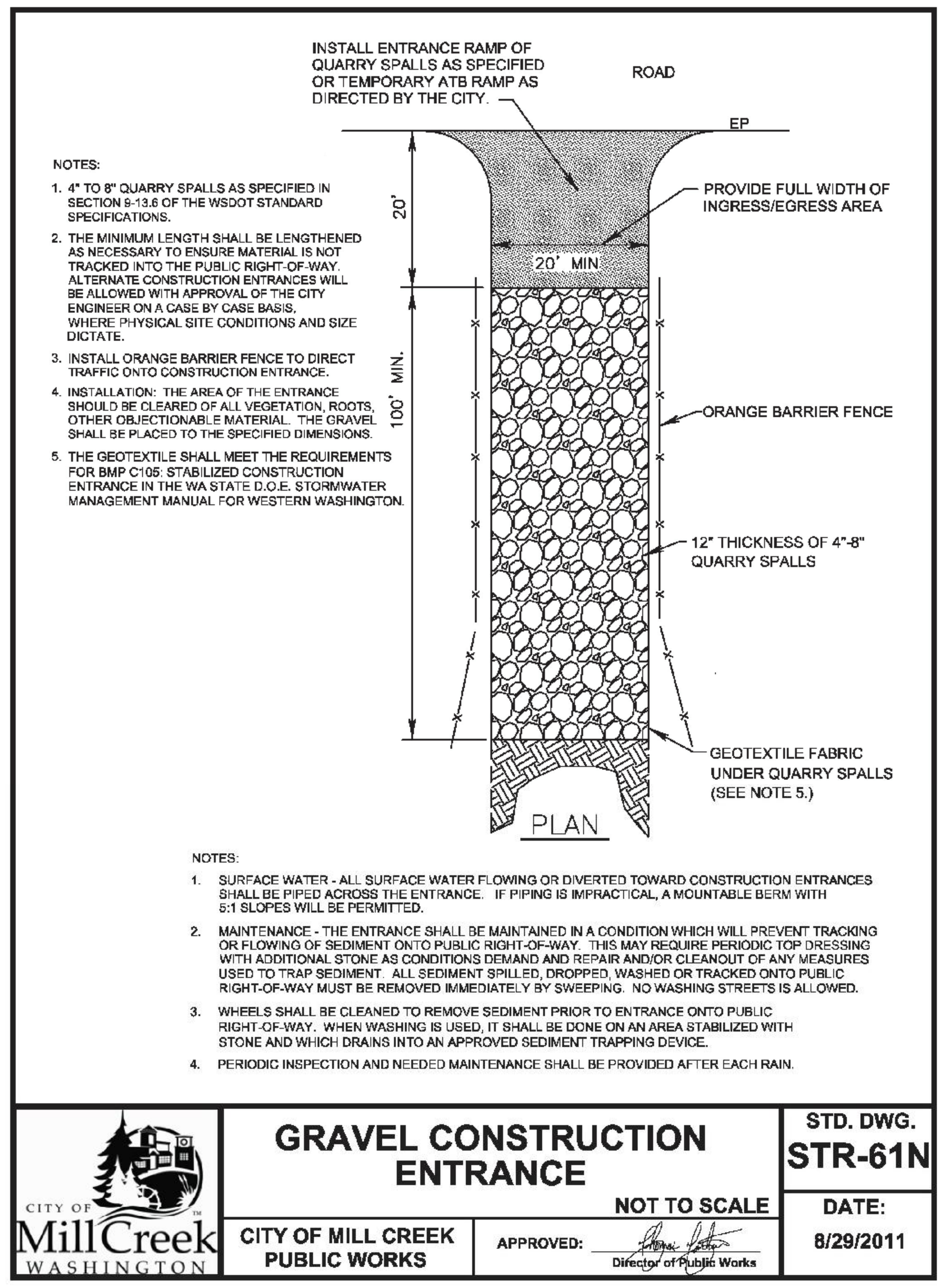

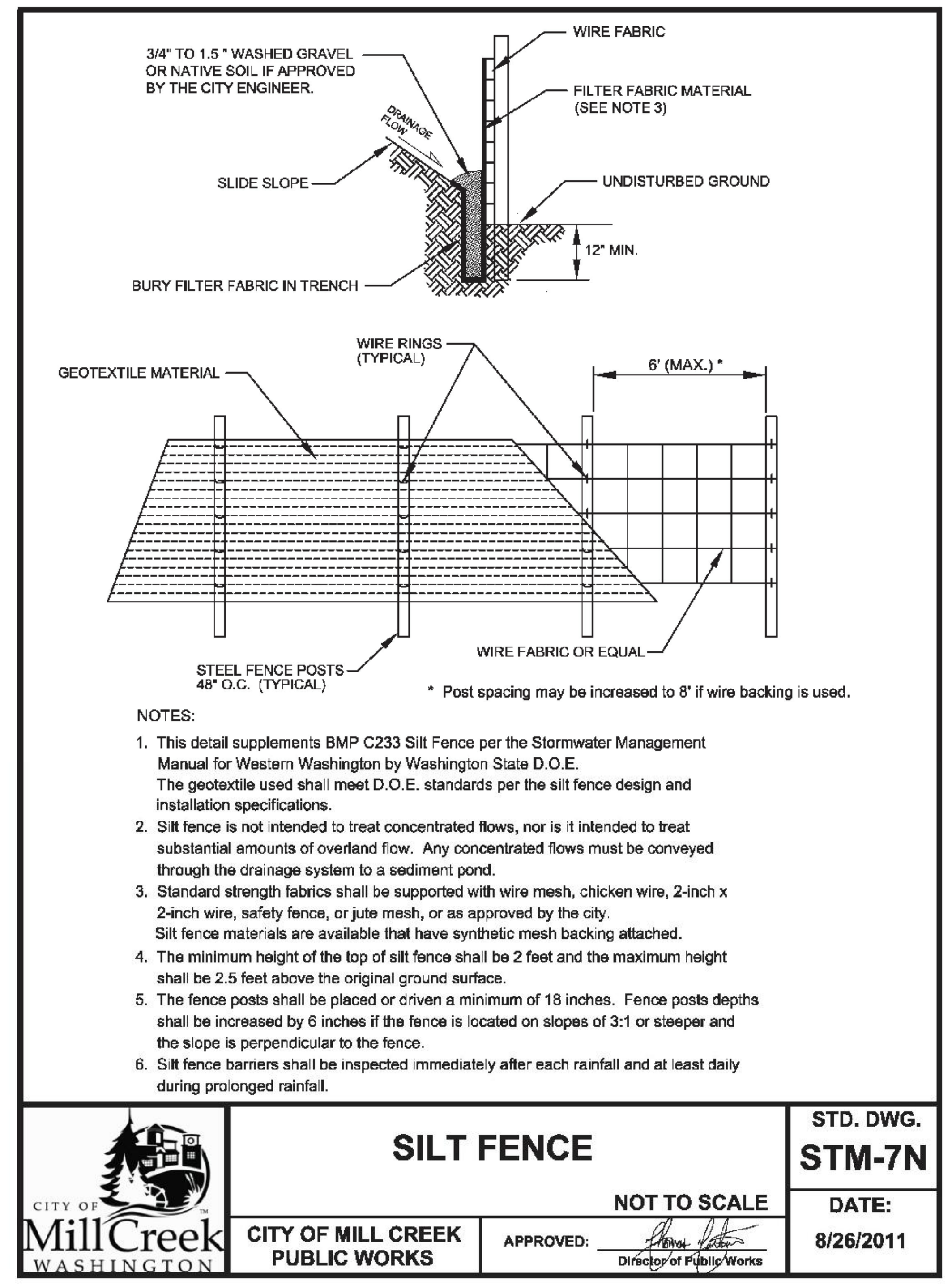

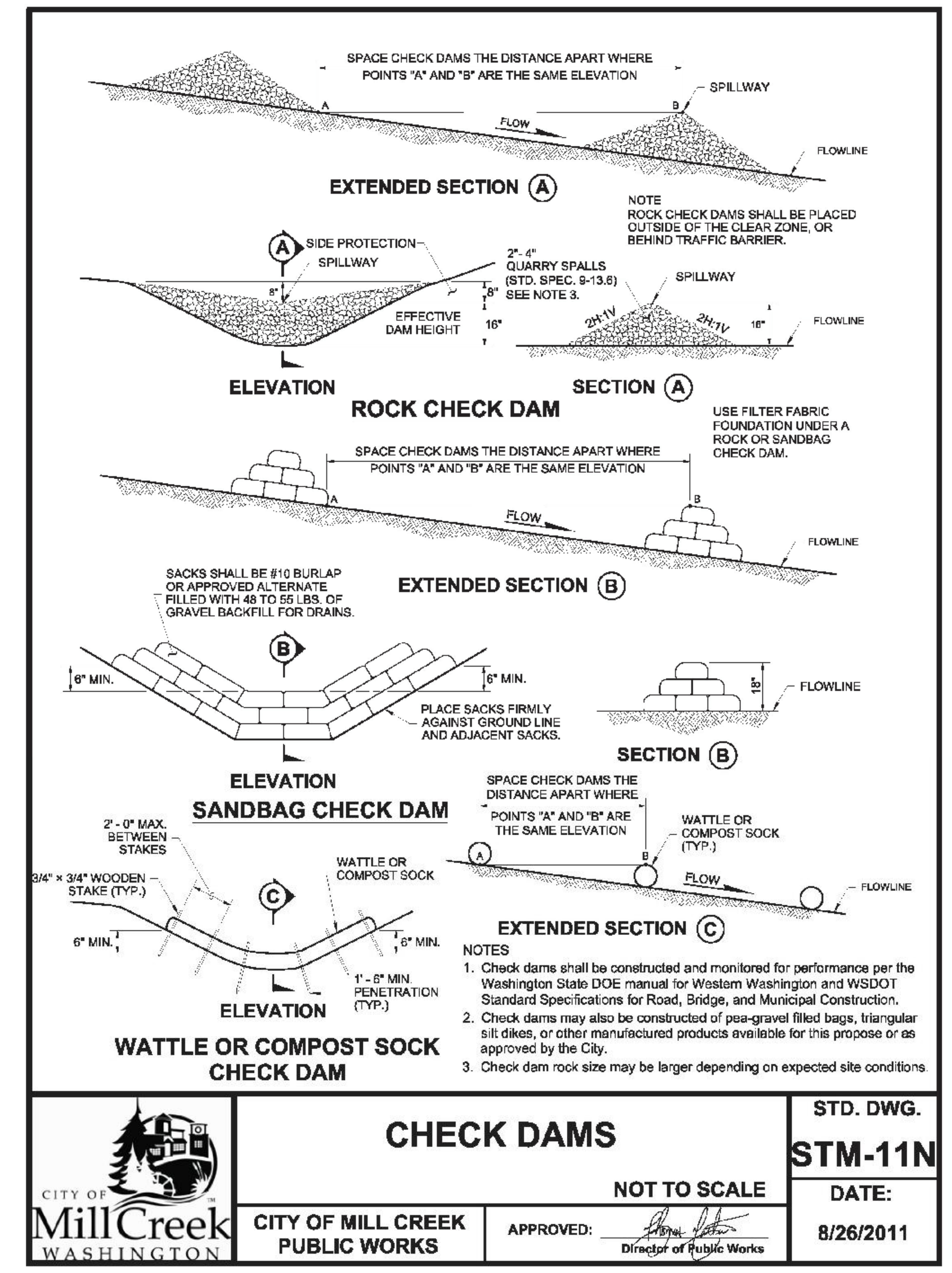

NOTES

1. Size the Below Inlet Grate Device (BIGD) for the storm water structure it will service.
2. The BIGD shall have a built-in high-flow relief system (overflow bypass).
3. The retrieval system must allow removal of the BIGD without spilling the collected material.
4. Perform maintenance in accordance with Standard Specification 8-01.3(15).

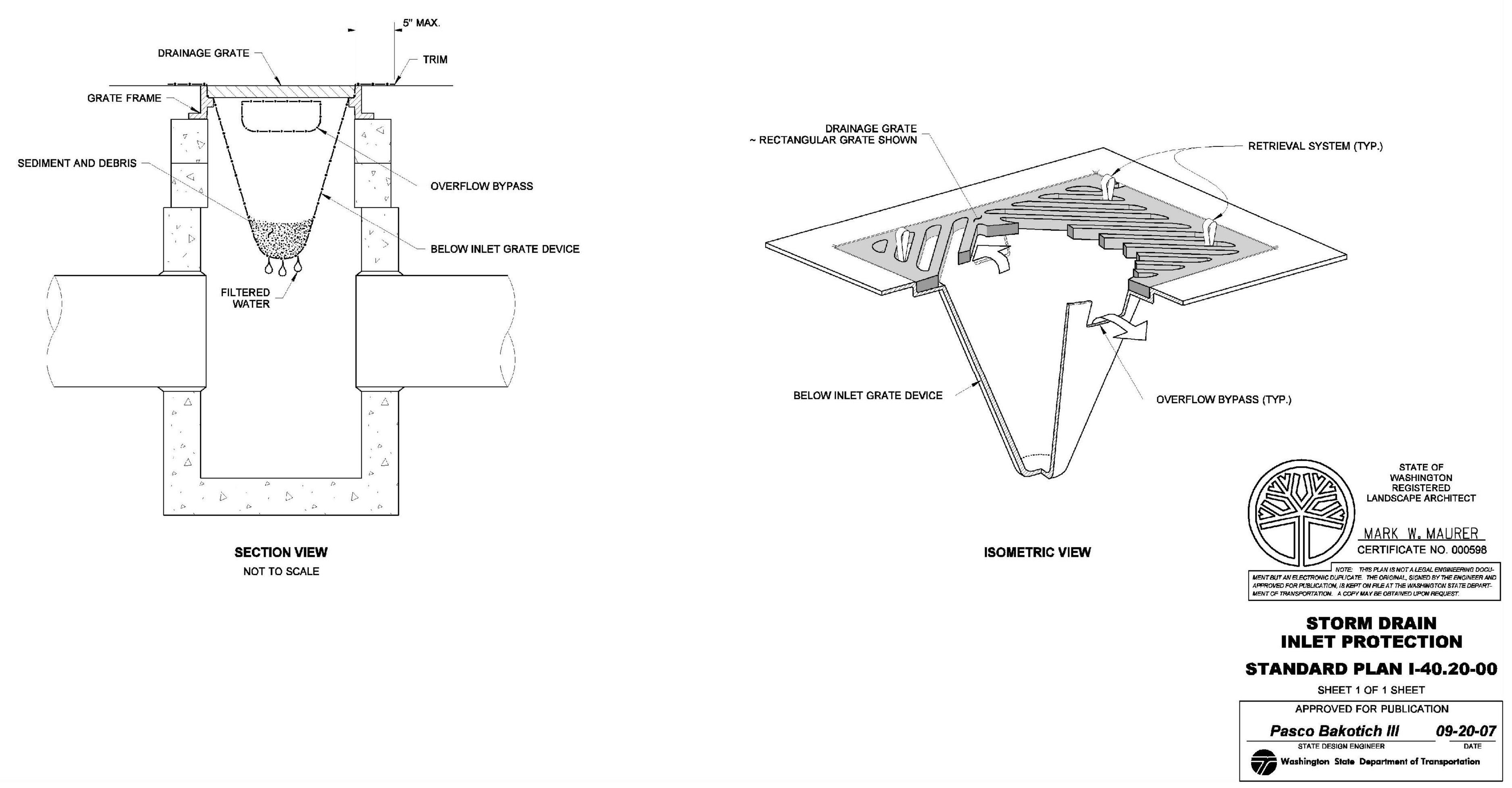

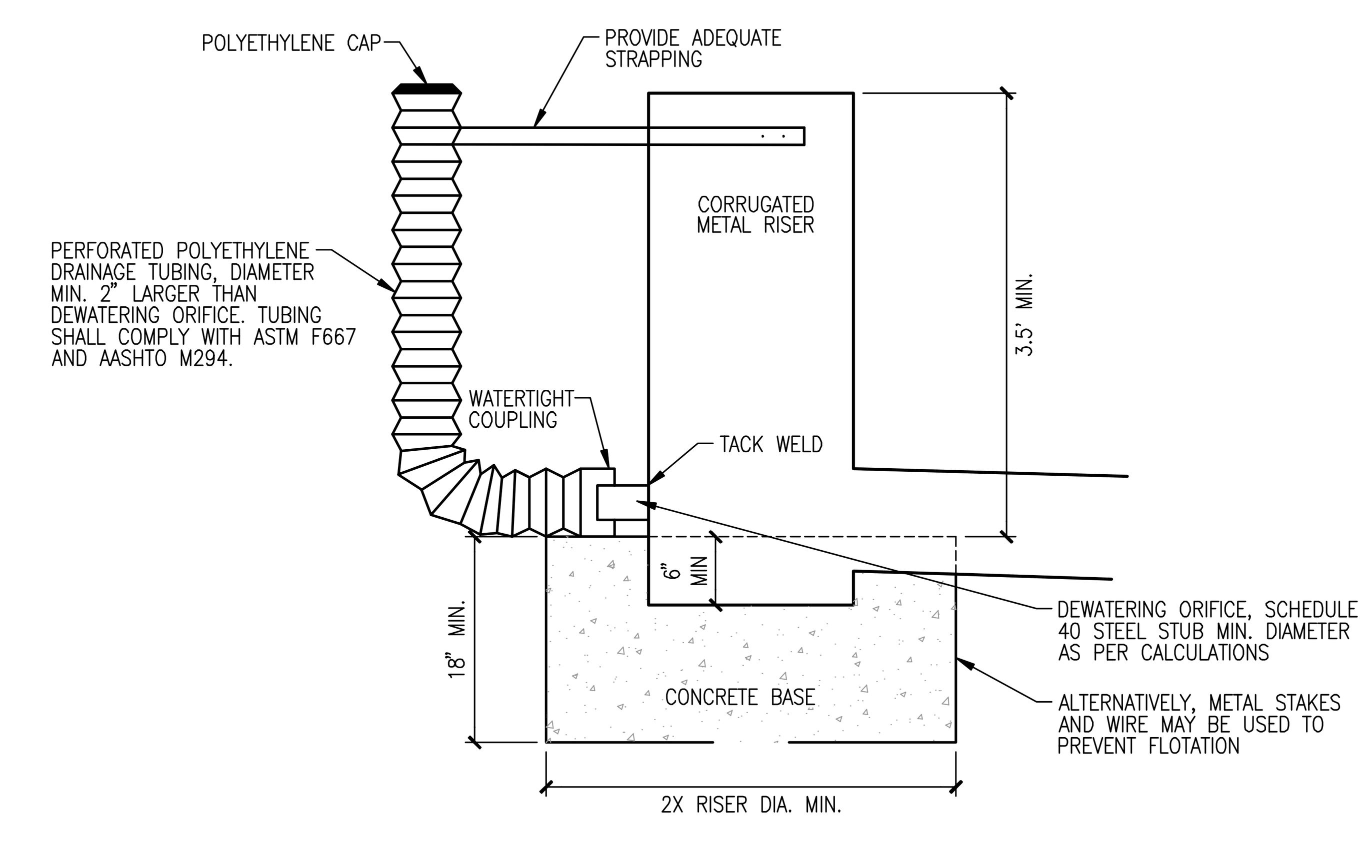

SEDIMENT POND RISER DETAIL

NOT TO SCALE

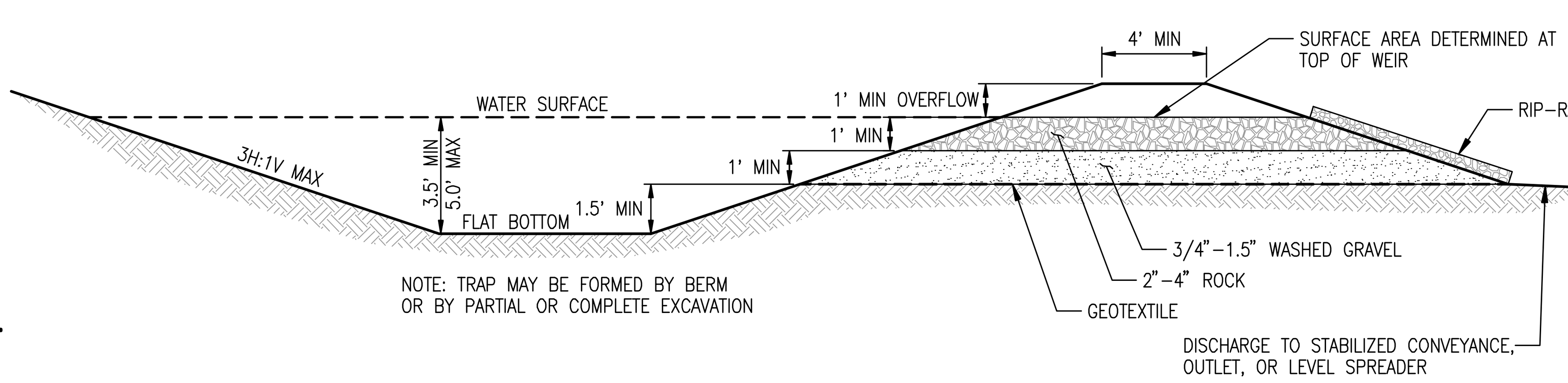

TEMPORARY SEDIMENT POND

NOT TO SCALE

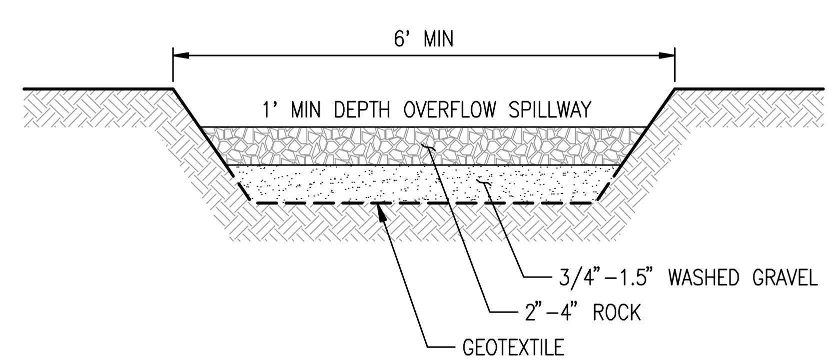

SEDIMENT POND OUTLET

NOT TO SCALE

BOUNDARY DISCLAIMER

THE BOUNDARY SURVEY WAS PERFORMED BY LDC, INC. IN MAY 2013. ANY CHANGES TO THE SITE AFTER THIS DATE WILL NOT BE REFLECTED IN THE PLANS. ANY DISCREPANCIES FOUND BETWEEN WHAT IS SHOWN ON THE PLANS AND WHAT IS NOTED IN THE FIELD SHOULD BE BROUGHT IMMEDIATELY TO THE ATTENTION OF THE ENGINEER.

TOPOGRAPHIC DISCLAIMER

TOPOGRAPHIC SURVEY INFORMATION CONTAINED ON THESE PLANS HAS BEEN PROVIDED BY CORNERSTONE ENGINEERING, INC. LDC, INC. (LAND DEVELOPMENT CONSULTANTS, INC.) ASSUMES NO LIABILITY AS TO THE ACCURACY AND COMPLETENESS OF THIS DATA. ANY DISCREPANCIES FOUND BETWEEN WHAT IS SHOWN ON THE PLANS AND WHAT IS NOTED IN THE FIELD SHOULD BE BROUGHT IMMEDIATELY TO THE ATTENTION OF THE ENGINEER.

Call 2 Business Days Before You Dig
811 or 1-800-424-5555
Utilities Underground Location Center

REVISIONS

NO.	DATE	DESCRIPTION	BY

LDC — THE CIVIL ENGINEERING GROUP
Engineering · Structural · Planning · Survey
14201 NE 200th St. #100, Woodinville, WA 98072
Ph. 425.806.1869 Fx. 425.482.2893
www.LDCcorp.com

CSA REAL ESTATE, LLC
ARENA SPORTS MILL CREEK
PRELIMINARY TESC DETAILS

JOB NUMBER:	16-115
DRAWING NAME:	16115P-ER-DT
DESIGNER:	MEV
DRAFTING BY:	BPC
DATE:	9-27-16
SCALE:	AS NOTED
JURISDICTION:	MILL CREEK

ER-02

Drawing: P:\2016\16-115 Mill Creek Commercial\Drawings\Preliminary\16115P-ER-DT.dwg Plotted: Sep 27, 2016 - 3:36pm

A PORTION OF THE NE 1/4 OF SECTION 31, TWP. 28 N., RGE. 5 E., W.M., CITY OF MILL CREEK, SNOHOMISH COUNTY, WASHINGTON

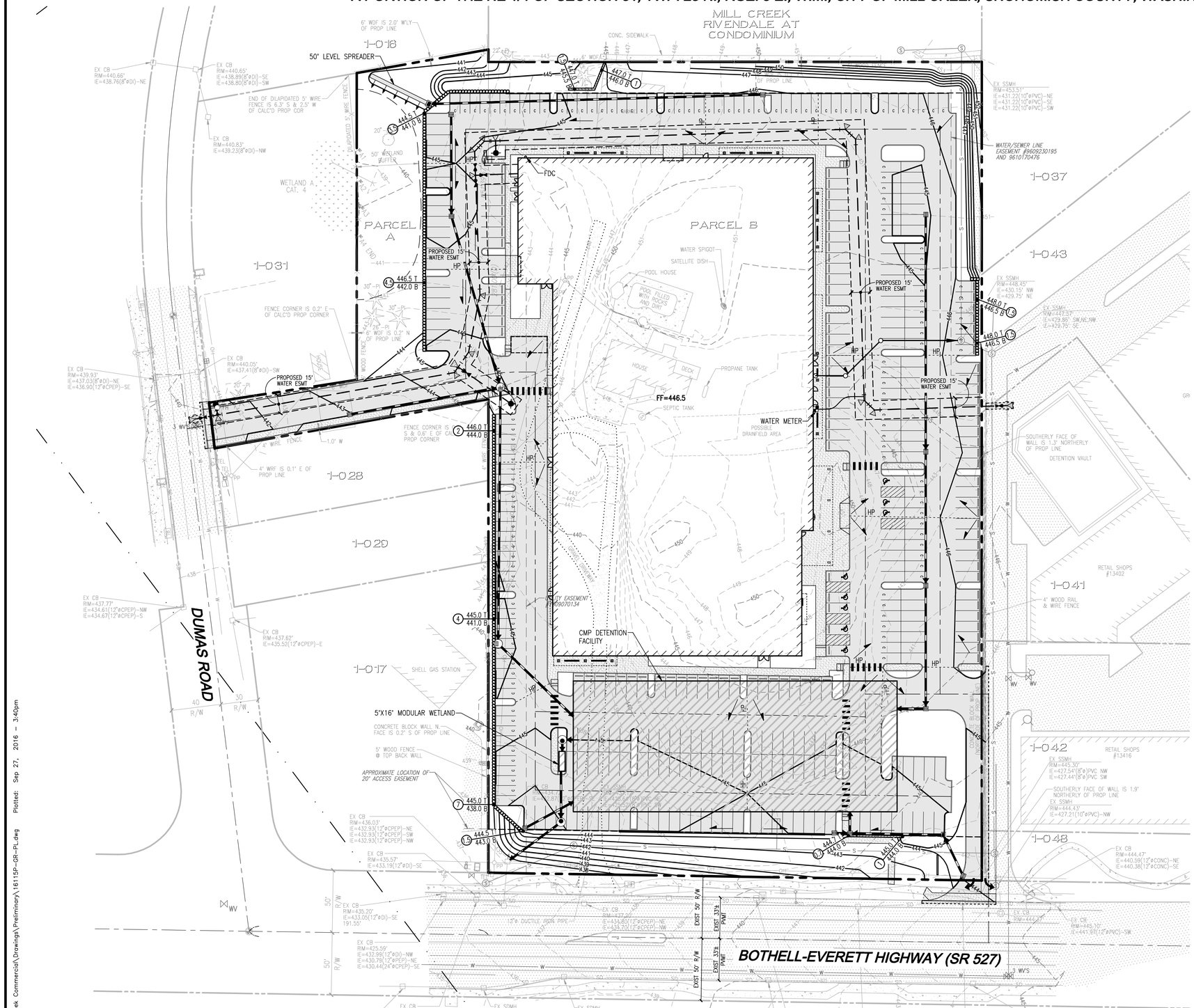

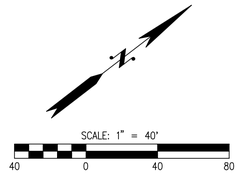

LEGEND

- STORM PIPE
- SEWER PIPE
- WATER PIPE
- CLEARING AREA / PROTECTED AREA — CLEARING LIMITS
- PAVEMENT FLOW DIRECTION
- HP — HIGH POINT
- LP — LOW POINT
- RETAINING WALL
- ROCKERY WALL

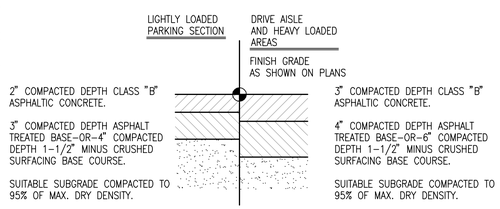

ON-SITE ASPHALT PAVEMENT SECTION OPTIONS

NOT TO SCALE

NOTES

1. SEE BINDING SITE PLAN BY LDC, INC. FOR DIMENSIONED SITE PLAN.
2. ALL EXISTING STRUCTURES TO BE REMOVED.

EARTHWORK QUANTITIES

CUT: 22,000 CY
FILL: 22,000 CY

BOUNDARY DISCLAIMER

THE BOUNDARY SURVEY WAS PERFORMED BY LDC, INC. IN MAY 2013. ANY CHANGES TO THE SITE AFTER THIS DATE WILL NOT BE REFLECTED IN THE PLANS. ANY DISCREPANCIES FOUND BETWEEN WHAT IS SHOWN ON THE PLANS AND WHAT IS NOTED IN THE FIELD SHOULD BE BROUGHT IMMEDIATELY TO THE ATTENTION OF THE ENGINEER.

TOPOGRAPHIC DISCLAIMER

TOPOGRAPHIC SURVEY INFORMATION CONTAINED ON THESE PLANS HAS BEEN PROVIDED BY CORNERSTONE ENGINEERING, INC. LDC, INC. (LAND DEVELOPMENT CONSULTANTS, INC.) ASSUMES NO LIABILITY AS TO THE ACCURACY AND COMPLETENESS OF THIS DATA. ANY DISCREPANCIES FOUND BETWEEN WHAT IS SHOWN ON THE PLANS AND WHAT IS NOTED IN THE FIELD SHOULD BE BROUGHT IMMEDIATELY TO THE ATTENTION OF THE ENGINEER.

Call 2 Business Days Before You Dig
811 or 1-800-424-5555
Utilities Underground Location Center

REVISIONS

NO.	DATE	DESCRIPTION	BY

LDC
THE CIVIL ENGINEERING GROUP
Engineering
Structural
Planning
Survey
14201 NE 200th St., #100
Woodinville, WA 98072
Ph. 425.805.1869
Fx. 425.482.2883
www.LDCcorp.com

CSA REAL ESTATE, LLC

ARENA SPORTS MILL CREEK

PRELIMINARY GRADING AND UTILITY PLAN

MARK E. VILLINGER — STATE OF WASHINGTON — 40908 — REGISTERED PROFESSIONAL ENGINEER — 9-27-16

JOB NUMBER:	16-115
DRAWING NAME:	16115P-GR-PL
DESIGNER:	MEV
DRAFTING BY:	BPC
DATE:	9-27-16
SCALE:	1"=40'
JURISDICTION:	MILL CREEK

GR-01

SHEET 4 OF 6

Drawing: P:\2016\16-115 Mill Creek Commercial\Drawings\Preliminary\16115P-GR-PL.dwg Plotted: Sep 27, 2016 - 3:40pm

A PORTION OF THE NE 1/4 OF SECTION 31, TWP. 28 N., RGE. 5 E., W.M., CITY OF MILL CREEK, SNOHOMISH COUNTY, WASHINGTON

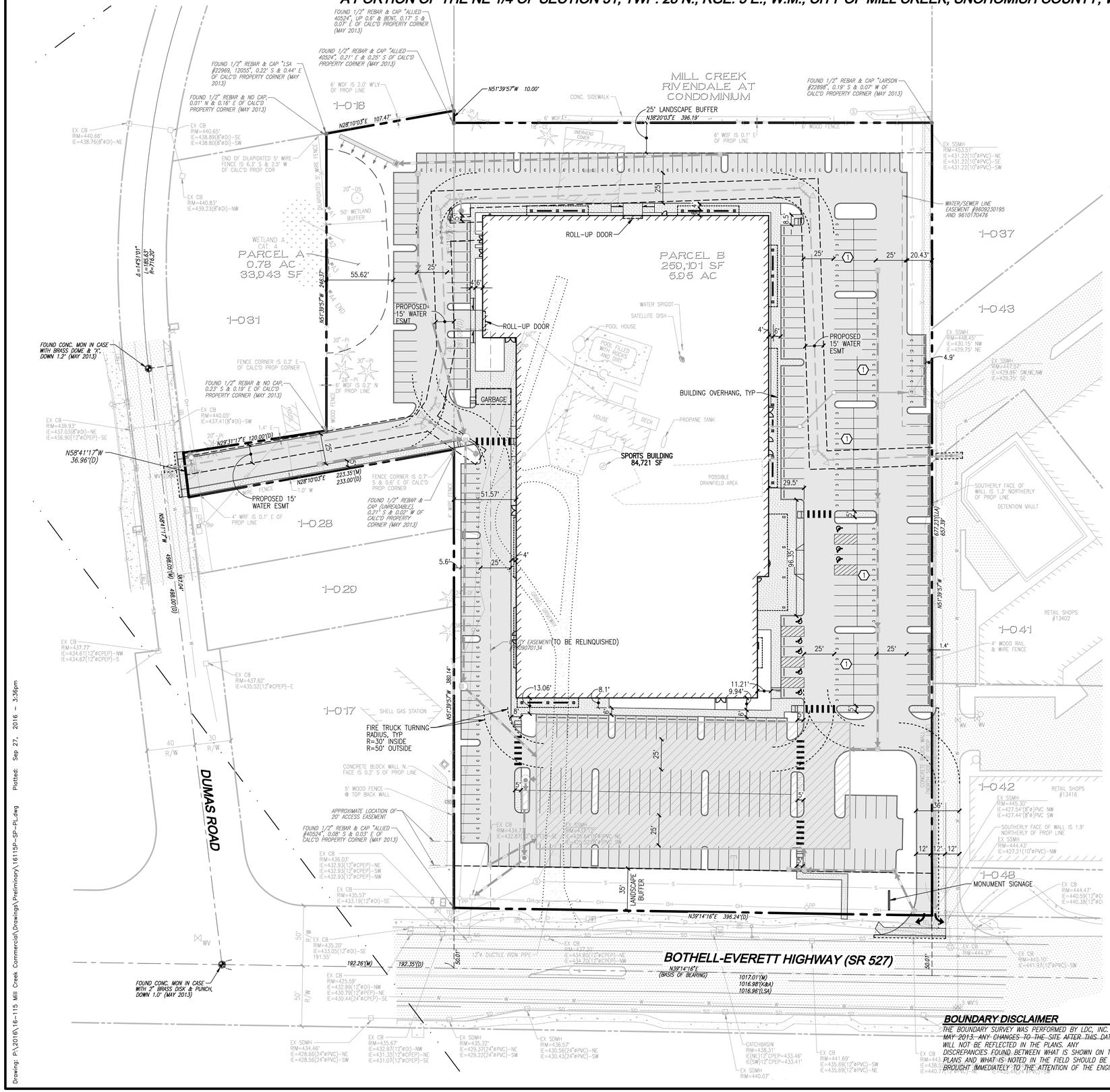

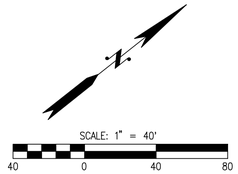

PROJECT INFORMATION

PROJECT TYPE:	PRINCIPAL USE:	TAX PARCEL #'S:	28053100104000
	COMMERCIAL RECREATION FACILITIES		28053100103400
SITE AREA:	6.73 ACRES (293,167 SF)		28053100103200
ZONING:	COMMUNITY BUSINESS *		
	PERMITTED	**PROPOSED**	**CODE REFERENCE**
MAX BUILDING COVERAGE:	NONE	84,721 SF	MCMC 17.16.060
HEIGHT LIMIT:	40 FEET	40 FEET	MCMC 17.16.070
MIN LOT SIZE:	7,200 SQUARE FEET	293,167 SF	MCMC 17.16.040
PARKING:	**PROPOSED–SPORTS BLDG** REQUIRED: 176 STALLS BASED ON USE OF INTERIOR AREAS (SEE ESTIMATE OF REQUIRED AND PROPOSED PARKING SPACES PARKING ANALYSIS INCLUDED WITH THIS SUBMITTAL).		
STANDARD:	246		
COMPACT:	128		
ADA:	8		
TOTAL:	382		
REGULAR 90' STALL:	8.5 FT x 19 FT	COMPLIES	MCMC 17.22.080A
COMPACT 90' STALL:	8 FT x 16 FT	COMPLIES	WAC 51–10
DRIVE AISLE @90' PARKING:	25 FT	COMPLIES	
SETBACKS:			
FRONT – BOTHELL– EVERETT HWY.:	35 FT ROADWAY BUFFER		MCMC 17.16.080A
SIDEYARD/REARYARD TO RESIDENTIAL:	25 FT		
PARKING FRONT:	35 FT		
BUFFER:			
WETLAND (CAT. 4)	50 FT		MCMC 18.06.930.B
LANDSCAPE REQUIREMENTS:			
TREES:	1 TREE PER 4 PARKING SPACES		MCMC 17.34.04003(d)
PARKING:	382/4 = 96 TREES NO MORE THAN 10 SPACES BETWEEN LANDSCAPE ISLANDS OR MEDIANS	COMPLIES	MCMC 17.34.04003
LANDSCAPE ISLANDS:	MUST BE 5 FEET WIDE	COMPLIES	MCMC 17.34.04004

* THIS SITE HAS A PRINCIPAL USE AS A COMMERCIAL RECREATION FACILITY PER MCMC17.16.010G.

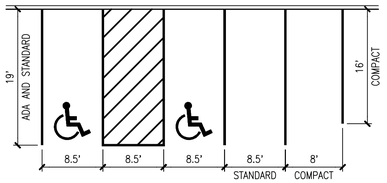

PARKING SPACE DETAIL

NOT TO SCALE

NOTE

(1) COMPACT PARKING STALLS ADJACENT TO STANDARD PARKING STALLS ARE TO BE 8.5' WIDE

BOUNDARY DISCLAIMER

THE BOUNDARY SURVEY WAS PERFORMED BY LDC, INC. IN MAY 2013. ANY CHANGES TO THE SITE AFTER THIS DATE WILL NOT BE REFLECTED IN THE PLANS. ANY DISCREPANCIES FOUND BETWEEN WHAT IS SHOWN ON THE PLANS AND WHAT IS NOTED IN THE FIELD SHOULD BE BROUGHT IMMEDIATELY TO THE ATTENTION OF THE ENGINEER.

TOPOGRAPHIC DISCLAIMER

TOPOGRAPHIC SURVEY INFORMATION CONTAINED ON THESE PLANS HAS BEEN PROVIDED BY CORNERSTONE ENGINEERING, INC. LDC, INC. (LAND DEVELOPMENT CONSULTANTS, INC.) ASSUMES NO LIABILITY AS TO THE ACCURACY AND COMPLETENESS OF THIS DATA. ANY DISCREPANCIES FOUND BETWEEN WHAT IS SHOWN ON THE PLANS AND WHAT IS NOTED IN THE FIELD SHOULD BE BROUGHT IMMEDIATELY TO THE ATTENTION OF THE ENGINEER.

Call 2 Business Days Before You Dig
811 or 1-800-424-5555
Utilities Underground Location Center

REVISIONS

NO.	DATE	DESCRIPTION	BY

LDC
THE CIVIL ENGINEERING GROUP
Engineering
Structural
Planning
Survey
14201 NE 200th St., #100
Woodinville, WA 98072
Ph. 425.806.1869
Fx. 425.482.2883
www.LDCcorp.com

CSA REAL ESTATE, LLC

ARENA SPORTS MILL CREEK

PRELIMINARY SITE PLAN

MARK E. VILLINGER
STATE OF WASHINGTON
40908
REGISTERED PROFESSIONAL ENGINEER
9-27-16

JOB NUMBER:	16–115
DRAWING NAME:	16115P–SP–PL
DESIGNER:	MEV
DRAFTING BY:	BPC
DATE:	9–27–16
SCALE:	1"=40'
JURISDICTION:	MILL CREEK

SP-01

SHEET 5 OF 6

Drawing: P:\2016\16-115 Mill Creek Commercial\Drawings\Preliminary\16115P-SP-PL.dwg Plotted: Sep 27, 2016 - 3:36pm

A PORTION OF THE NE 1/4 OF SECTION 31, TWP. 28 N., RGE. 5 E., W.M., CITY OF MILL CREEK, SNOHOMISH COUNTY, WASHINGTON

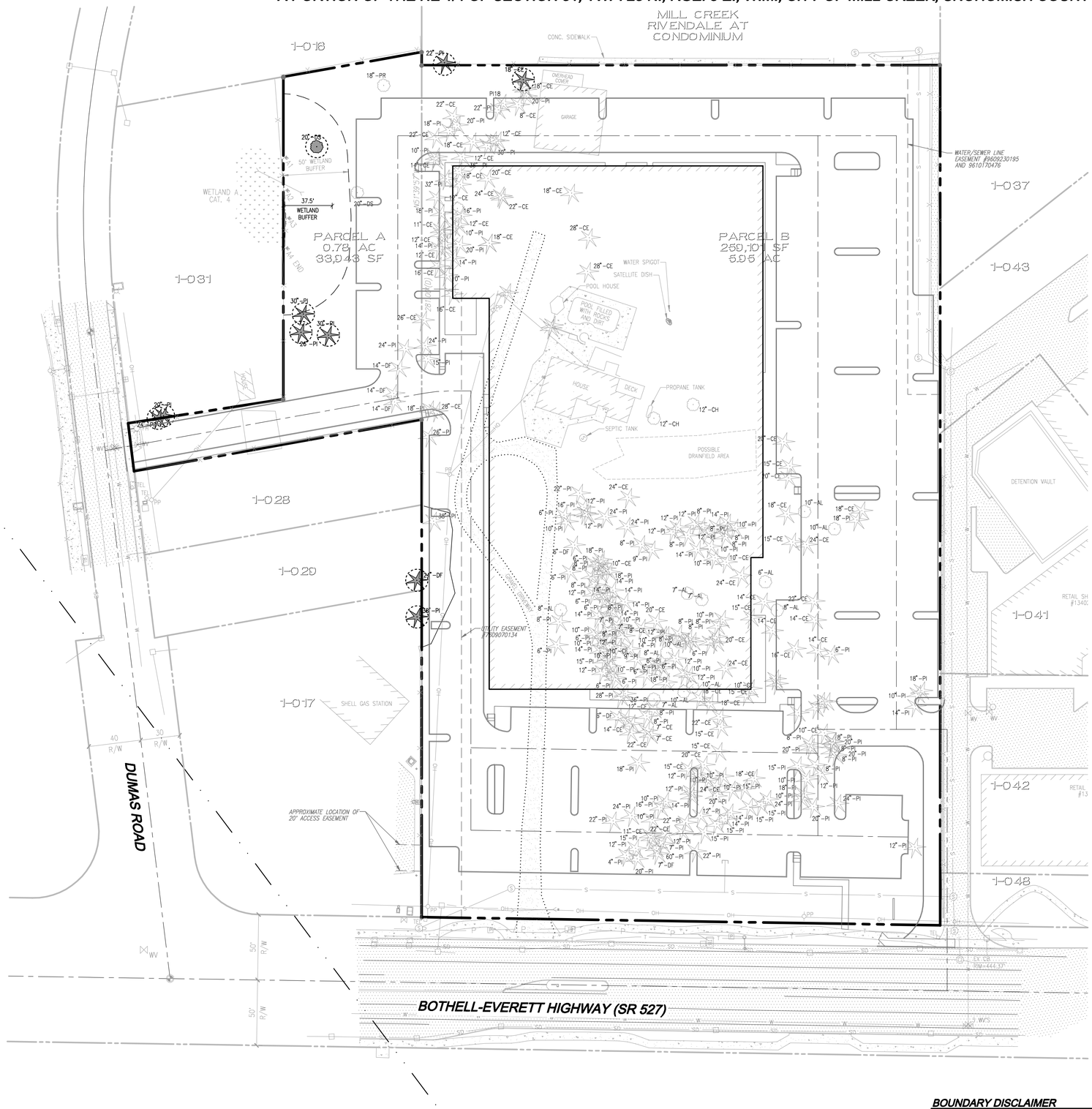

SCALE: 1" = 40'

40 0 40 80

LEGEND

TREE TO REMAIN

TREE TYPE LEGEND

	CONIFEROUS TREE
	DECIDUOUS TREE
XX"–AL	ALDER
XX"–DS	DECIDUOUS
XX"–CH	CHERRY
XX"–CE	CEDAR
XX"–DF	DOUGLAS FIR
XX"–PI	PINE
XX"–PR	POPLAR

NOTES:

TREES THAT ARE TO BE PRESERVED ARE SUBJECT TO THE STANDARDS OUTLINED IN MCMC SECTION 15.10.045 AND PENALTIES ESTABLISHED IN MCMC SECTION 15.10.075.

BOUNDARY DISCLAIMER

THE BOUNDARY SURVEY WAS PERFORMED BY LDC, INC. IN MAY 2013. ANY CHANGES TO THE SITE AFTER THIS DATE WILL NOT BE REFLECTED IN THE PLANS. ANY DISCREPANCIES FOUND BETWEEN WHAT IS SHOWN ON THE PLANS AND WHAT IS NOTED IN THE FIELD SHOULD BE BROUGHT IMMEDIATELY TO THE ATTENTION OF THE ENGINEER.

TOPOGRAPHIC DISCLAIMER

TOPOGRAPHIC SURVEY INFORMATION CONTAINED ON THESE PLANS HAS BEEN PROVIDED BY CORNERSTONE ENGINEERING, INC. LDC, INC. (LAND DEVELOPMENT CONSULTANTS, INC.) ASSUMES NO LIABILITY AS TO THE ACCURACY AND COMPLETENESS OF THIS DATA. ANY DISCREPANCIES FOUND BETWEEN WHAT IS SHOWN ON THE PLANS AND WHAT IS NOTED IN THE FIELD SHOULD BE BROUGHT IMMEDIATELY TO THE ATTENTION OF THE ENGINEER.

Call 2 Business Days Before You Dig
811 or 1-800-424-5555
Utilities Underground Location Center

REVISIONS

NO.	DATE	DESCRIPTION	BY

LDC
THE CIVIL ENGINEERING GROUP
Engineering
Structural
Planning
Survey
14201 NE 200th St., #100
Woodinville, WA 98072
Ph. 425.805.1869
Fx. 425.482.2893
www.LDCcorp.com

CSA REAL ESTATE, LLC

ARENA SPORTS
MILL CREEK

TREE RETENTION PLAN

MARK E. VILLINOVA
STATE OF WASHINGTON
20906
REGISTERED
PROFESSIONAL ENGINEER
9-27-16

JOB NUMBER:	16–115
DRAWING NAME:	16115P–TR01
DESIGNER:	MEV
DRAFTING BY:	BPC
DATE:	9–27–16
SCALE:	1"=40'
JURISDICTION:	MILL CREEK

TR-01

SHEET 6 OF 6

Drawing: P:\2016\16-115 Mill Creek Commercial\Drawings\Preliminary\16115P-TR01.dwg Plotted: Sep 27, 2016 - 3:37pm

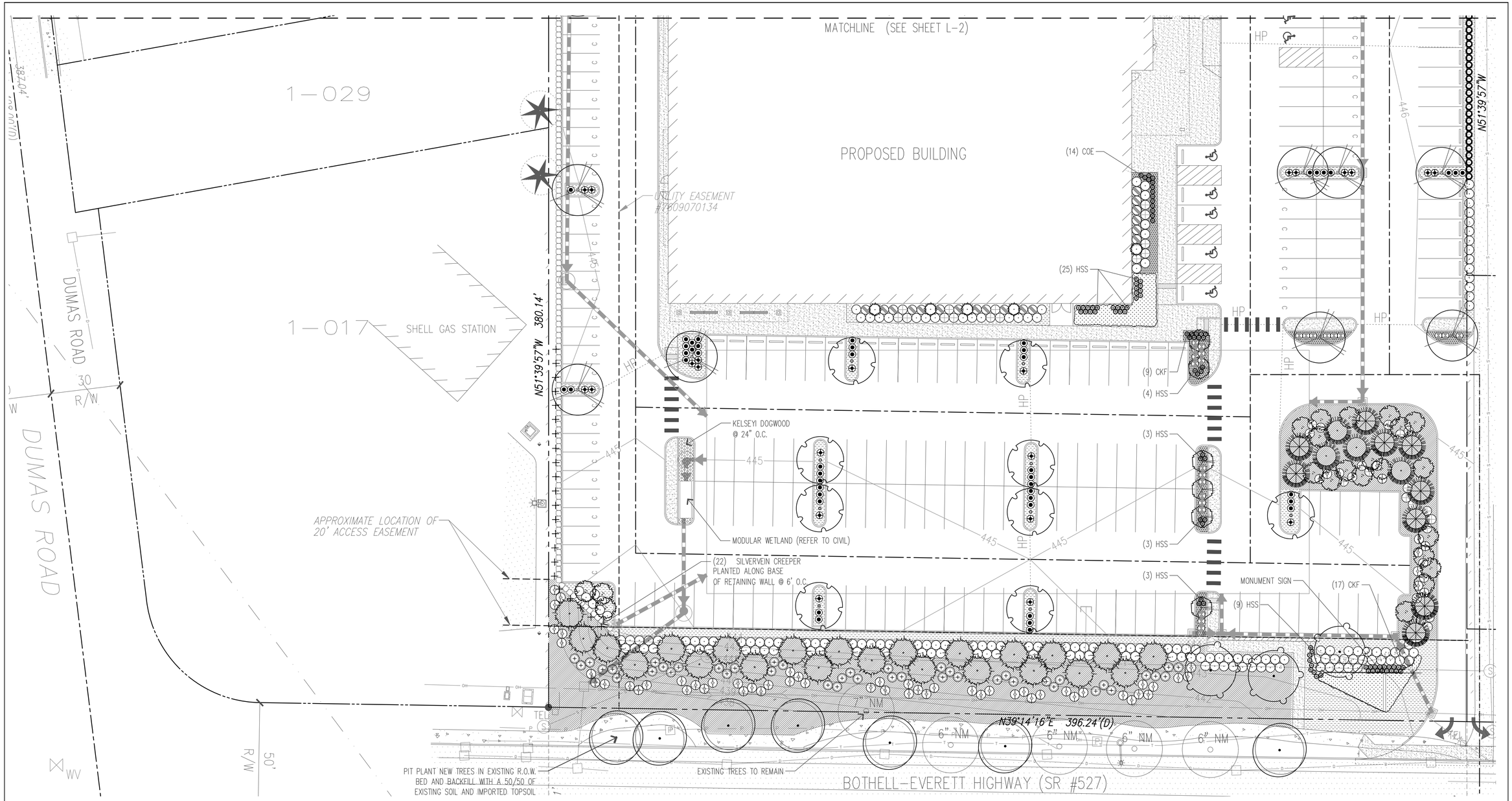

PLANT LEGEND

SYMBOL	BOTANICAL NAME / COMMON NAME	SYMBOL	BOTANICAL NAME / COMMON NAME	SYMBOL	BOTANICAL NAME / COMMON NAME	SYMBOL	BOTANICAL NAME / COMMON NAME
	DECIDUOUS TREES ACER CIRCINATUM / VINE MAPLE ACER PLATANOIDES 'COLUMNARBROAD' / PARKWAY MAPLE ACER T. x ACER P. 'WARRENRED' / PACIFIC SUNSET MAPLE CARPINUS BETULUS 'FRANS FONTAINE' / FRANS FONTAINE HORNBEAM CERCIS CANADAENSIS 'OKLAHOMA' / OKLAHOMA REDBUD FAGUS SYLVATICA 'DAWYCK PURPLE' / DAWYCK PURPLE BEECH ZELCOVA SERRATA 'VILLAGE GREEN' / VILLAGE GREEN ZELCOVA **EVERGREEN TREES** CHAMAECYPARIS OBUTSA 'GRACILIS' / SLENDER HINOKI CALOCEDRUS DECURRENS / INCENSE CEDAR PSEUDOTSUGA MENZIEII / DOUGLAS FIR THUJA PLICATA 'EXCELSA' / WESTERN RED CEDAR		**EVERGREEN SHRUBS** ABELIA X GRANDIFLORA 'ROSE CREEK' / GLOSSY ABELIA ARBUTUS UNEDO 'COMPACTA' / STRAWBERRY TREE ILEX CRENATA 'SKY PENCIL' / SKY PENCIL JAPANESE HOLLY MAHONIA AQUIFOLIUM 'COMPACTA' / COMPACT OREGON GRAPE OSMANTHUS H. 'GOSHIKI' / VARIEGATED OSMANTHUS PRUNUS L. 'OTTO LUYKEN' / OTTO LUYKEN LAUREL SARCOCOCCA RUSCIFOLIA / FRAGRANT SWEETBOX TAXUS 'DARK GREEN SPREADER' / SPREADING YEW THUJA OCC. 'EMERALD GREEN' / EMERALD GREEN PYRAMIDALIS VIBURNUM DAVIDII / DAVID'S VIBURNUM VIBURNUM T. 'SPRING BOUQUET' / SPRING BOUQUET		**DECIDUOUS SHRUBS** BERBERIS T. A. 'HILMOND PILLAR' / HELMOND PILLAR BARBERRY CORNUS SERICEA 'ARCTIC FIRE' / REDTWIG DOGWOOD PHYSOCARPUS O. 'SUMMER WINE' / PACIFIC NINEBARK SPIRAEA X BUMALDA 'ANTHONY WATERER' / SPIREA SPIRAEA JAPONICA 'WALBUMA' / MAGIC CARPET SPIREA SYMPHORICARPOS ALBUS / SNOWBERRY **PERENNIALS / ORNAMENTAL GRASSES** CKF — CALAMAGROSTIS X A. 'KARL FOERSTER" / FEATHER REED GRASS COE — CAREX OSHIMENSIS/ EVEREST VARIEGATED SEDGE HSS — HELICTOTRICHON SEMPERVIRENS 'SHAPHIRE' / BLUE OAT GRASS **VINES** PARTHENOCISSUS HENRYANA / SILVERVINE CREEPER		**GROUNDCOVER** ARCHTOSTAPHYLOS UVA-URSI / KINNIKINNICK CORNUS SERICA 'KELSYI' / DWARF REDTWIG DOGWOOD GAULTHERIA SHALLON / SALAL GERANIUM X C. 'KARMINA' / KARMINA CRANESBILL PRUNUS L. 'MT. VERNON' / MT VERNON LAUREL **WETLAND BUFFER / EROSION CONTROL SEED MIX:**

NOTES

1. REFER TO SHEET L-3 FOR PLANT SCHEDULE, NOTES, AND DETAILS.

PARKING LOT LANDSCAPE CALCULATIONS

TOTAL PARKING SPACES: 382

REQUIRED PARKING LOT TREES: 96 (1 TREE PER 4 PARKING SPACES)
PROVIDED PARKING LOT TREES: 96

LEGEND

CALIPER @ DBH
TREE TYPE
12" F
SIGNIFICANT TREES TO REMAIN

TREE TYPE ABBREVIATIONS
NM NORWAY MAPLE

LANDSCAPE PLAN

0 10' 20' 40' 80'
SCALE: 1" = 20' - 0"

SHEET SIZE: 24" x 36" AT 100%

WBLA Landscape Architecture Site Planning Irrigation
16630 30th Dr. S.E.
Bothell, WA 98012
phone (425) 417-6019

PROJECT:
ARENA SPORTS

LOCATION:
MILL CREEK, WA

CLIENT:
CSA REAL ESTATE, LLC
6840 FORT DENT WAY
SEATTLE, WA 98188

NO.	DATE	REVISION
	09.20.2016	PERMIT

DESIGNED CB
DRAWN CB
CHECKED CB

PROFESSIONAL SEAL
STATE OF WASHINGTON REGISTERED LANDSCAPE ARCHITECT
WILLIAM A. BROWN
CERTIFICATE NO. 501

DATE 08.29.2016

PROJECT NO. 201630

TITLE
LANDSCAPE PLAN

SHEET NUMBER
L-1

© WBLA 2015

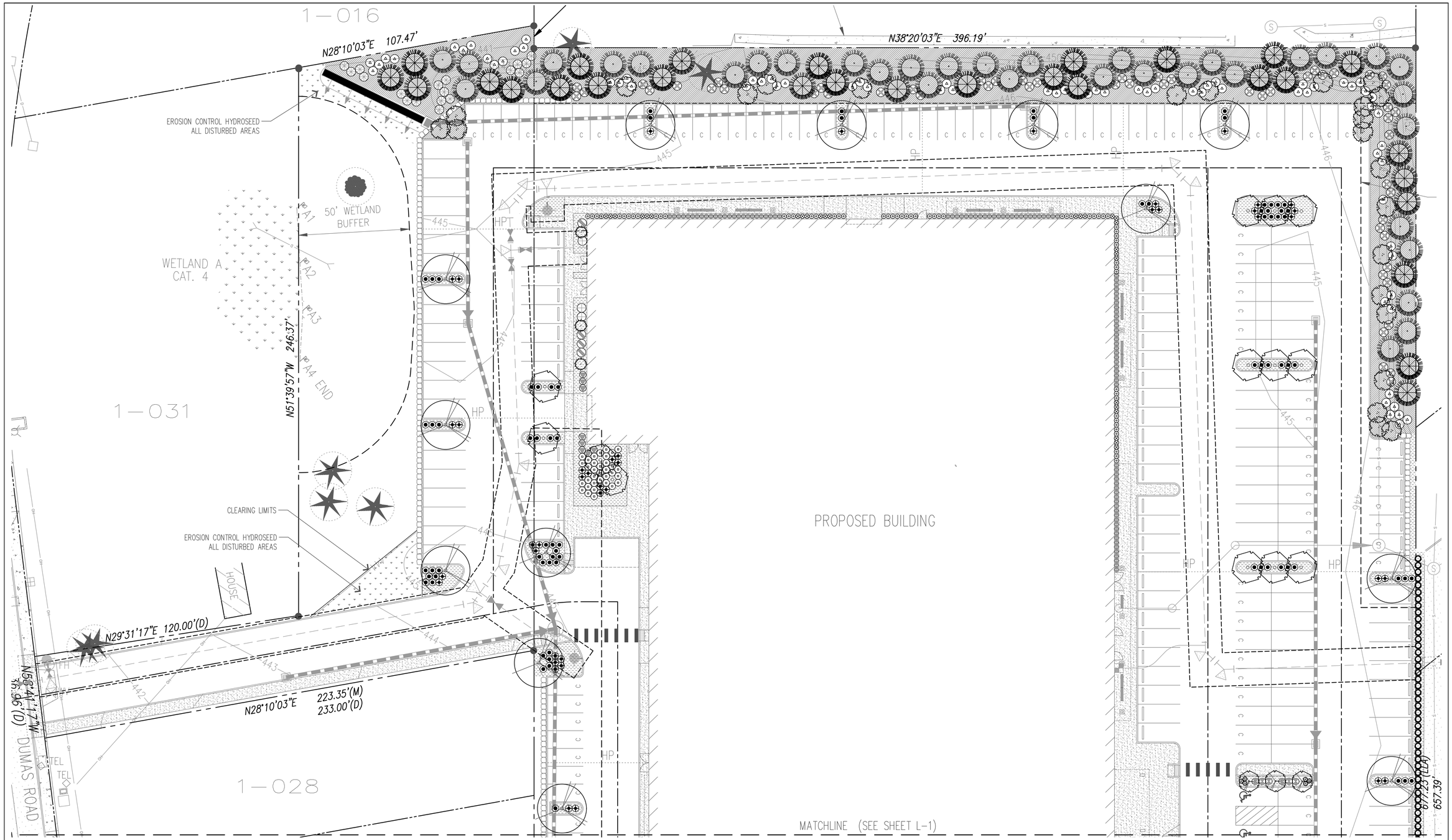

PLANT LEGEND

SYMBOL	BOTANICAL NAME / COMMON NAME
	DECIDUOUS TREES
	ACER CIRCINATUM / VINE MAPLE
	ACER PLATANOIDES 'COLUMNARBROAD' / PARKWAY MAPLE
	ACER T. x ACER P. 'WARRENRED' / PACIFIC SUNSET MAPLE
	CARPINUS BETULUS 'FRANS FONTAINE' / FRANS FONTAINE HORNBEAM
	CERCIS CANADAENSIS 'OKLAHOMA' / OKLAHOMA REDBUD
	FAGUS SYLVATICA 'DAWYCK PURPLE' / DAWYCK PURPLE BEECH
	ZELCOVA SERRATA 'VILLAGE GREEN' / VILLAGE GREEN ZELCOVA
	EVERGREEN TREES
	CHAMAECYPARIS OBUTSA 'GRACILIS' / SLENDER HINOKI
	CALOCEDRUS DECURRENS / INCENSE CEDAR
	PSEUDOTSUGA MENZIEII / DOUGLAS FIR
	THUJA PLICATA 'EXCELSA' / WESTERN RED CEDAR

SYMBOL	BOTANICAL NAME / COMMON NAME
	EVERGREEN SHRUBS
	ABELIA X GRANDIFLORA 'ROSE CREEK' / GLOSSY ABELIA
	ARBUTUS UNEDO 'COMPACTA' / STRAWBERRY TREE
	ILEX CRENATA 'SKY PENCIL' / SKY PENCIL JAPANESE HOLLY
	MAHONIA AQUIFOLIUM 'COMPACTA' / COMPACT OREGON GRAPE
	OSMANTHUS H. 'GOSHIKI' / VARIEGATED OSMANTHUS
	PRUNUS L. 'OTTO LUYKEN' / OTTO LUYKEN LAUREL
	SARCOCOCCA RUSCIFOLIA / FRAGRANT SWEETBOX
	TAXUS 'DARK GREEN SPREADER' / SPREADING YEW
	THUJA OCC. 'EMERALD GREEN' / EMERALD GREEN PYRAMIDALIS
	VIBURNUM DAVIDII / DAVID'S VIBURNUM
	VIBURNUM T. 'SPRING BOUQUET' / SPRING BOUQUET

SYMBOL	BOTANICAL NAME / COMMON NAME
	DECIDUOUS SHRUBS
	BERBERIS T. A. 'HILMOND PILLAR' / HELMOND PILLAR BARBERRY
	CORNUS SERICEA 'ARCTIC FIRE' / REDTWIG DOGWOOD
	PHYSOCARPUS O. 'SUMMER WINE' / PACIFIC NINEBARK
	SPIRAEA X BUMALDA 'ANTHONY WATERER' / SPIREA
	SPIRAEA JAPONICA 'WALBUMA' / MAGIC CARPET SPIREA
	SYMPHORICARPOS ALBUS / SNOWBERRY
	PERENNIALS / ORNAMENTAL GRASSES
CKF	CALAMAGROSTIS X A. 'KARL FOERSTER" / FEATHER REED GRASS
COE	CAREX OSHIMENSIS/ EVEREST VARIEGATED SEDGE
HSS	HELICTOTRICHON SEMPERVIRENS 'SHAPHIRE' / BLUE OAT GRASS
	VINES
	PARTHENOCISSUS HENRYANA / SILVERVINE CREEPER

SYMBOL	BOTANICAL NAME / COMMON NAME
	GROUNDCOVER
	ARCHTOSTAPHYLOS UVA-URSI / KINNIKINNICK
	CORNUS SERICA 'KELSYI' / DWARF REDTWIG DOGWOOD
	GAULTHERIA SHALLON / SALAL
	GERANIUM X C. 'KARMINA' / KARMINA CRANESBILL
	PRUNUS L. 'MT. VERNON' / MT VERNON LAUREL
	WETLAND BUFFER / EROSION CONTROL SEED MIX:

NOTES

1. REFER TO SHEET L-3 FOR PLANT SCHEDULE, NOTES, AND DETAILS.

LANDSCAPE PLAN

0 10' 20' 40' 80'

SCALE: 1" = 20' - 0"

SHEET SIZE: 24" x 36" AT 100%

© WBLA 2015

WBLA
Landscape Architecture
Site Planning Irrigation
16630 30th Dr. S.E.
Bothell, WA 98012
phone (425) 417-6019

PROJECT:
ARENA SPORTS

LOCATION:
MILL CREEK, WA

CLIENT:
CSA REAL ESTATE, LLC
6840 FORT DENT WAY
SEATTLE, WA 98188

NO.	DATE	REVISION
	09.20.2016	PERMIT

DESIGNED CB
DRAWN CB
CHECKED CB

PROFESSIONAL SEAL

STATE OF WASHINGTON REGISTERED LANDSCAPE ARCHITECT
WILLIAM A. BROWN
CERTIFICATE NO. 501

DATE 08.29.2016

PROJECT NO. 201630

TITLE
LANDSCAPE PLAN

SHEET NUMBER
L-2

PLANT SCHEDULE

SYMBOL	BOTANICAL NAME / COMMON NAME	QTY	SIZE	REMARKS
	DECIDUOUS TREES			
	ACER CIRCINATUM / VINE MAPLE	47	MIN. 8–10' HT.	B & B
	ACER PLATANOIDES 'COLUMNARBROAD' / PARKWAY MAPLE	7	MIN. 2" CAL.	B & B
	ACER T. x ACER P. 'WARRENRED' / PACIFIC SUNSET MAPLE	21	MIN. 1–3/4" CAL.	B & B
	CARPINUS BETULUS 'FRANS FONTAINE' / FRANS FONTAINE HORNBEAM	13	MIN. 1–3/4" CAL.	B & B
	CERCIS CANADAENSIS 'OKLAHOMA' / OKLAHOMA REDBUD	9	MIN. 1–3/4" CAL.	B & B
	FAGUS SYLVATICA 'DAWYCK PURPLE' / DAWYCK PURPLE BEECH	9	MIN. 1–3/4" CAL.	B & B
	ZELCOVA SERRATA 'VILLAGE GREEN' / VILLAGE GREEN ZELCOVA	3	MIN. 2" CAL.	B & B
	EVERGREEN TREES			
	CHAMAECYPARIS OBUTSA 'GRACILIS' / SLENDER HINOKI	8	MIN. 6' HT.	B & B
	CALOCEDRUS DECURRENS / INCENSE CEDAR	23	MIN. 8' HT.	B & B
	PSEUDOTSUGA MENZIEII / DOUGLAS FIR	39	MIN. 8' HT.	B & B
	THUJA PLICATA 'EXCELSA' / WESTERN RED CEDAR	38	MIN. 8' HT.	B & B
	EVERGREEN SHRUBS			
	ABELIA X GRANDIFLORA 'ROSE CREEK' / GLOSSY ABELIA	18	5 GAL.	
	ARBUTUS UNEDO 'COMPACTA' / STRAWBERRY TREE	67	5 GAL.	
	ILEX CRENATA 'SKY PENCIL' / SKY PENCIL JAPANESE HOLLY	59	5 GAL.	
	MAHONIA AQUIFOLIUM 'COMPACTA' / COMPACT OREGON GRAPE	71	1 GAL.	
	OSMANTHUS H. 'GOSHIKI' / VARIEGATED OSMANTHUS	10	5 GAL.	
	PRUNUS L. 'OTTO LUYKEN' / OTTO LUYKEN LAUREL	163	5 GAL.	
	SARCOCOCCA RUSCIFOLIA / FRAGRANT SWEETBOX	99	5 GAL.	
	TAXUS 'DARK GREEN SPREADER' / SPREADING YEW	122	5 GAL.	
	THUJA OCC. 'EMERALD GREEN' / EMERALD GREEN PYRAMIDALIS	65	MIN. 5' HT.	B & B
	VIBURNUM DAVIDII / DAVID'S VIBURNUM	34	5 GAL.	
	VIBURNUM T. 'SPRING BOUQUET' / SPRING BOUQUET	22	5 GAL.	
	DECIDUOUS SHRUBS			
	BERBERIS T. A. 'HILMOND PILLAR' / HELMOND PILLAR BARBERRY	27	5 GAL.	
	CORNUS SERICEA 'ARCTIC FIRE' / REDTWIG DOGWOOD	18	1 GAL.	
	PHYSOCARPUS O. 'SUMMER WINE' / PACIFIC NINEBARK	43	5 GAL.	
	SPIRAEA X BUMALDA 'ANTHONY WATERER' / SPIREA	36	5 GAL.	
	SPIRAEA JAPONICA 'WALBUMA' / MAGIC CARPET SPIREA	64	1 GAL.	
	SYMPHORICARPOS ALBUS / SNOWBERRY	54	1 GAL.	
	PERENNIALS / ORNAMENTAL GRASSES			
CKF	CALAMAGROSTIS X A. 'KARL FOERSTER" / FEATHER REED GRASS	26	1 GAL.	24" O.C.
COE	CAREX OSHIMENSIS/ EVEREST VARIEGATED SEDGE	14	1 GAL.	24" O.C.
HSS	HELICTOTRICHON SEMPERVIRENS 'SHAPHIRE' / BLUE OAT GRASS	50	1 GAL.	24" O.C.
	VINES			
	PARTHENOCISSUS HENRYANA / SILVERVINE CREEPER	22	1 GAL.	6' O.C.
	GROUNDCOVER			
	ARCHTOSTAPHYLOS UVA–URSI / KINNIKINNICK	1,800	4" POT	24" O.C.
	CORNUS SERICA 'KELSYI' / DWARF REDTWIG DOGWOOD	32	1 GAL.	24" O.C.
	GAULTHERIA SHALLON / SALAL	5,300	1 GAL.	24" O.C.
	GERANIUM X CANTABRIGIENSE 'KARMINA' / KARMINA CRANESBILL	110	1 GAL.	24" O.C.
	PRUNUS L. 'MT. VERNON' / MT VERNON LAUREL	200	1 GAL.	24" O.C.
	WETLAND BUFFER / EROSION CONTROL SEED MIX:			
	60–70% FESTUCA ARUNDINACEA / TALL FESCUE			
	10–15% AGROSTIS PALUSTRIIS / SEASIDE BENTGRASS			
	10–15% ALEPOCURUS PRATENSIS / MEADOW FOXTAIL			
	1–6% TRIFOLIUM HYBRIDIUM / ALSIKE CLOVER			
	1–6% AGROSTIS ALBA / REDTOP BENTGRASS			

LANDSCAPE NOTES

1. LANDSCAPE CONTRACTOR TO CLEAR AND GRUB FROM BENEATH EXISTING TREES TO REMAIN. REMOVE ALL BLACKBERRIES, GRASSES, AND OTHER NON NATIVE PLANT MATERIAL.
2. ALL NEW LANDSCAPE AREAS TO BE SET AT 8" MINUS FINISH ELEVATION EXCEPT AREAS WITHIN DRIP LINE OF EXISTING TREES TO REMAIN. NEW LANDSCAPE AREAS TO RECEIVE IMPORTED 3–WAY TOPSOIL TO A MINIMUM DEPTH OF 12". SUBGRADE TO BE SCARIFIED TO A DEPTH OF 12" AND ALL SPOILS (ROCK & DEBRIS > 2" DIA.) TO BE REMOVED PRIOR TO INSTALLATION OF NEW TOPSOIL. INSTALL TOPSOIL IN TWO LIFTS OF 6" EACH. ROTOTILL EACH LIFT TO A DEPTH OF 8" INTO SUBGRADE. PLANTING WITH IN DRIP LINE OF EXISTING TREES TO BE PIT PLANTED WITH A 50/50 MIX OF TOPSOIL AND EXISTING SUBGRADE. PLACE PLANTING TO MINIMIZE DISTURBANCE TO EXISTING ROOTS. 3–WAY IMPORTED TOPSOIL TO BE UNIFORMLY AMENDED FOR FERTILITY AND PH AS RECOMMENDED BY A CURRENT SOILS TEST PROVIDED BY SOIL AND PLANT LABORATORY OR APPROVED EQUAL. (SOIL AND PLANT LABORATORY, INC. 425–746–6665, TEST #A05–2)
3. GROUND COVER TO EXTEND UNDER ALL DECIDUOUS TREE CANOPIES AT THE SPECIFIED SPACING TO PROVIDE COMPLETE COVERAGE IN ALL PLANTING BEDS DESIGNATED TO RECEIVE GROUND COVER. GROUNDCOVER BENEATH EVERGREEN TREES TO MAINTAIN A MINIMUM 3' CLEARANCE FROM BASE OF TRUNK.
4. ALL PLANT MATERIAL HAS BEEN SELECTED TO BE DROUGHT TOLERANT. ALL SUBSTITUTIONS TO BE APPROVED BY THE LANDSCAPE ARCHITECT.
5. LANDSCAPE DRAWINGS ARE BASED ON THE SITE PLAN PREPARED BY LDC CIVIL ENGINEERS. NOTIFY LANDSCAPE ARCHITECT OF ANY FILED CHANGES TO THE SITE PLAN WHICH MAY REQUIRE ADJUSTMENTS TO LANDSCAPE PLAN.
6. ALL NEW AND EXISTING PLANTING BEDS TO RECEIVE FINE (1–1/2" MINUS) BARK MULCH INSTALLED TO A DEPTH OF 2".
8. ALL NEW PLANTINGS (EXCEPT EMERGENT PLANTS) TO BE FERTILIZED WITH STARTER FERTILIZER 2–4–2, APPLIED AT MANUFACTURERS RECOMMENDED RATE AND AGSAFE 20–10–5 21 GRAM PLANT TABS AT MANUFACTURES RECOMMENDED RATE.
9. A SIX–FOOT HIGH TEMPORARY CHAIN LINK FENCE TO BE PLACED TO PROTECT SIGNIFICANT TREES TO REMAIN. INSTALL FENCE POSTS USING CONCRETE PIER BLOCKS ONLY. AVOID DRIVING POSTS OR STAKES INTO MAJOR ROOTS. NO STOCKPILING OF MATERIALS, SOIL, DEBRIS, VEHICLE TRAFFIC, OR STORAGE OF EQUIPMENT SHALL BE ALLOWED WITHIN PROTECTION FENCE. ALL EXCAVATION WITHIN DRIP LINES SHALL BE INSPECTED BY A CERTIFIED ARBORIST BEFORE BACKFILLING. ANY TREE ROOTS REQUIRING REMOVAL SHALL BE CLEANLY CUT TO MINIMIZE DAMAGE TO EXISTING ROOTS TO REMAIN. ALL EXPOSED ROOTS TO BE COVERED WITH SOIL OR DAMP BURLAP ON SAME DAY AS EXPOSED TO PREVENT DRYING BEFORE BACKFILL OCCURS.
10. ALL NEW LANDSCAPE PLANTING TO BE IRRIGATED WITH A FULLY AUTOMATIC IRRIGATION SYSTEM. IRRIGATION SYSTEM TO BE UTILIZE HIGH EFFICIENCY IRRIGATION ELEMENTS INCLUDING A AUTOMATIC ET ADJUSTED IRRIGATION CONTROLLER. REFER TO SHEETS L–4 AND 5 FOR IRRIGATION PLANS.

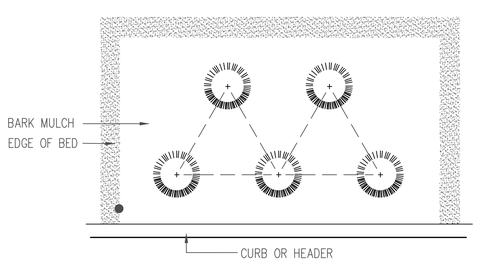

NOTE: SPACING TO BE TRIANG. PER DISTANCE SHOWN ON PLANT SCHEDULE

1 GROUND COVER SPACING
NTS

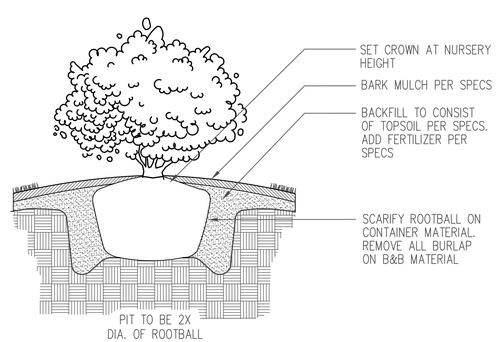

2 SHRUB PLANTING
NTS

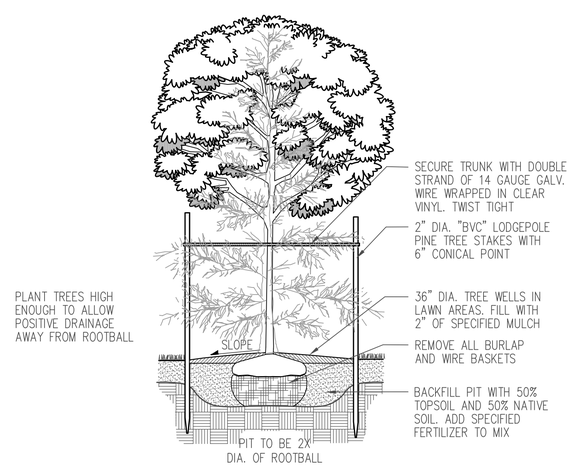

3 TREE STAKING
NTS

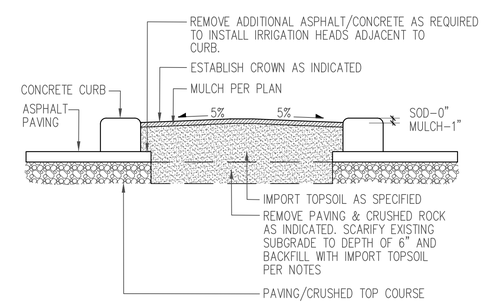

4 LANDSCAPE ISLAND
NTS

WBLA
Landscape Architecture
Site Planning Irrigation
16630 30th Dr. S.E.
Bothell, WA 98012
phone (425) 417–6019

PROJECT:
ARENA SPORTS

LOCATION:
MILL CREEK, WA

CLIENT:
CSA REAL ESTATE, LLC
6840 FORT DENT WAY
SEATTLE, WA 98188

NO.	DATE	REVISION
	09.20.2016	PERMIT

DESIGNED CB
DRAWN CB
CHECKED CB

PROFESSIONAL SEAL
STATE OF WASHINGTON
REGISTERED
LANDSCAPE ARCHITECT
WILLIAM A. BROWN
CERTIFICATE NO. 501

DATE 08.29.2016
PROJECT NO. 201630

TITLE
LANDSCAPE SCHEDULE, NOTES & DETAILS

SHEET NUMBER
L-3

SHEET SIZE: 24" x 36" AT 100%

© WBLA 2015

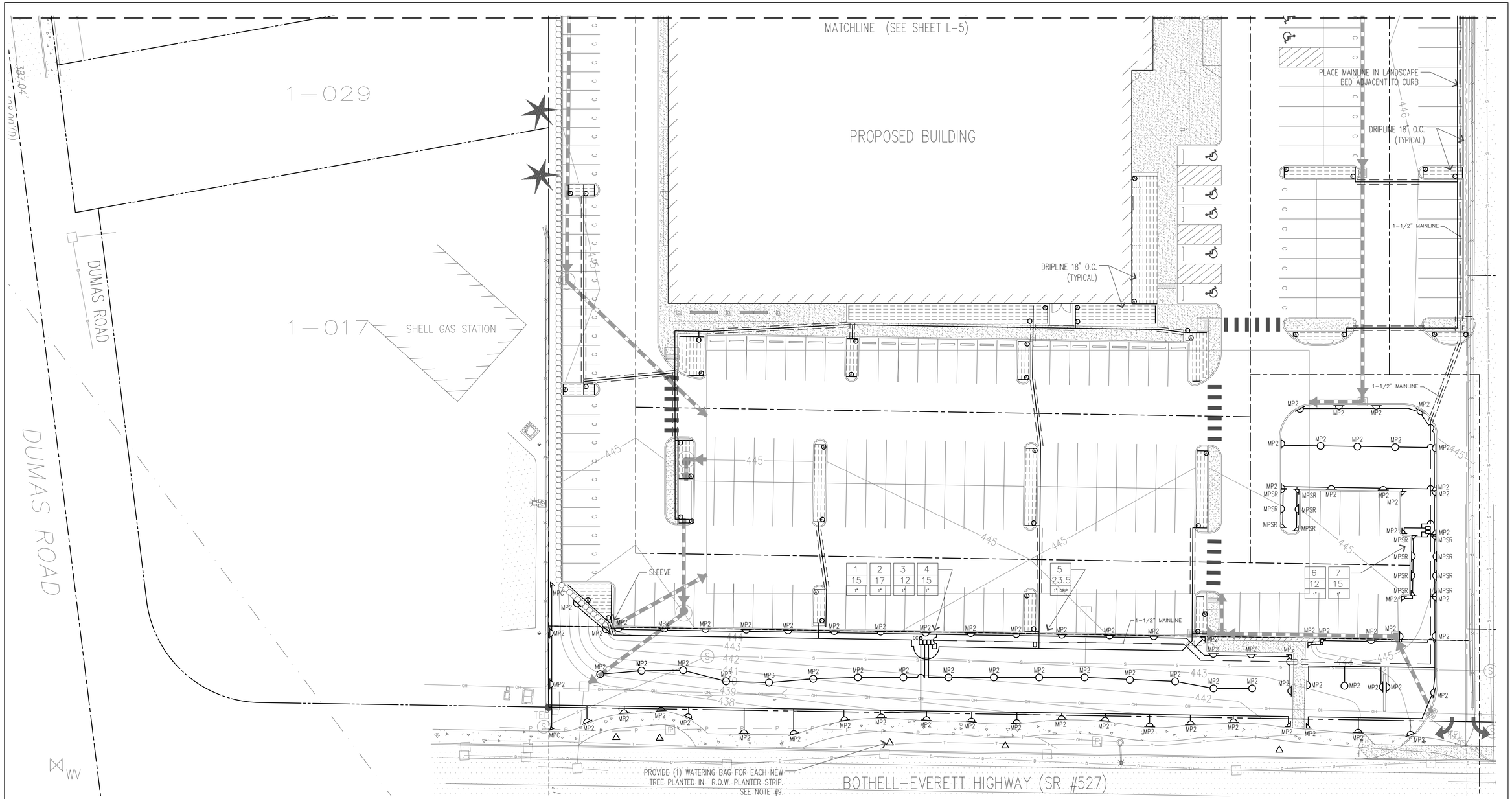

IRRIGATION SCHEDULE

SYM.	DESCRIPTION
▭	1" IRRIGATION METER (REFER TO CIVIL)
▭	POINT OF CONNECTION: (1) 1" BRONZE GATE VALVE (1) WILKENS 950XLC, 1" DOUBLE CHECK VALVE ASSEMBLY (1) HUNTER HQ44-LRC, 1" QUICK COUPLER (1) HUNTER ICV-151G-FS, 1-1/2" MASTER VALVE
C	IRRIGATION CONTROLLER : HUNTER IC-600-M-(2) ICM-600, EIGHTEEN STATION IRRIGATION CONTROLLER W/ HUNTER WSS-SEN, WIRELESS SOLAR-SYNC ET/RAIN/FREEZE SENSOR
▭	HUNTER ICV-101G-FS, 1" REMOTE CONTROL VALVE
▭	HUNTER ICZ-101-25, 1" DRIP CONTROL ZONE
∞	HUNTER HQ44-LRC-HSJ-1, 1" QUICK COUPLER W/ LOCKING RUBBER CAP
- - - - -	HUNTER PLD-10-18, DRIPLINE WITH 1.00 GPH DRIP EMITTERS @ 18" O.C. W/ HUNTER TIE DOWN STAKES @ 3' O.C. USE HUNTER FLUSH VALVES AND AIR/VACUUM RELIEF VALVES AS REQUIRED.
⊙	HUNTER PLD-BV, MANUAL FLUSH VALVE.
⊙	HUNTER PLD-AVR, AIR/RELIEF VALVE
— — —	1-1/2" MAINLINE, SCHEDULE 40 PVC
———	CLASS 200 PVC LATERAL LINE (SIZED PER PIPE SIZING TABLE BELOW)
====	4" SLEEVING, SCHEDULE 40 PVC (MINIMUM 2X SIZE OF INTERIOR PIPE)

IRRIGATION SCHEDULE

SYM.	DESCRIPTION	P.S.I.	RAD.	G.P.M.
MP3	HUNTER PROS-12-PRS40-MP3000 360, 12" POP-UP ROTATOR	40	30'	3.65
MP3	HUNTER PROS-12-PRS40-MP3000 90-210, 12" POP-UP ROTATOR	40	30'	1.82
MP3	HUNTER PROS-12-PRS40-MP3000 90-210, 12" POP-UP ROTATOR	40	30'	0.86
MP2	HUNTER PROS-12-PRS40-MP2000 360, 12" POP-UP ROTATOR	40	20'	1.47
MP2	HUNTER PROS-12-PRS40-MP2000 90-210, 12" POP-UP ROTATOR	40	20'	0.74
MP2	HUNTER PROS-12-PRS40-MP2000 90-210, 12" POP-UP ROTATOR	40	20'	0.40
MP1	HUNTER PROS-12-PRS40-MP1000 369, 12" POP-UP ROTATOR	40	14'	0.75
MP1	HUNTER PROS-12-PRS40-MP1000 90-210, 12" POP-UP ROTATOR	40	14'	0.37
MP1	HUNTER PROS-12-PRS40-MP1000 90-210, 12" POP-UP ROTATOR	40	14'	0.19
MPC	HUNTER PROS-12-PRS40-MP CORNER, 12" POP-UP ROTATOR	40	14'	0.19
MPSR	HUNTER PROS-12-PRS40-MP1000 90-210, 12" POP-UP ROTATOR	40	10'	0.42
MPSR	HUNTER PROS-12-PRS40-MP CORNER, 12" POP-UP ROTATOR	40	10'	0.23

PIPE SIZING TABLE

PIPE SIZE	MAX G.P.M.
3/4" CLASS 200	UP TO 10 G.P.M.
1" CLASS 200	UP TO 16 G.P.M.
1-1/4" CLASS 200	UP TO 26 G.P.M.
1-1/2" CLASS 200	UP TO 35 G.P.M.

1 — ZONE #
1.2 — G.P.M.
1" — VALVE SIZE / TYPE

IRRIGATION NOTES

1. VERIFY LOCATIONS OF ALL UNDERGROUND UTILITIES PRIOR TO COMMENCEMENT OF WORK. PROTECT ALL NEW AND EXISTING UTILITIES. PROMPTLY NOTIFY THE LANDSCAPE ARCHITECT OF ANY CONFLICT BETWEEN PROPOSED WORK AND OBSTRUCTIONS.
2. IRRIGATION CONTRACTOR SHALL PROVIDE PROTECTION OF ALL PROPERTY, PERSONS, WORK IN PROGRESS, STRUCTURES, UTILITIES, WALKS, CURBS, PAVED SURFACES AND EXISTING LANDSCAPE AND IRRIGATION TO REMAIN DURING THE INSTALLATION OF LANDSCAPE AND IRRIGATION WORK. VERIFY LOCATIONS OF ALL UNDERGROUND UTILITIES PRIOR TO COMMENCEMENT OF WORK AND PROTECT SAID UTILITIES.
3. IRRIGATION CONTRACTOR SHALL OBTAIN AND PAY FOR ALL NECESSARY PERMITS AND FEES AS REQUIRED BY APPLICABLE CODES AND ORDINANCES FOR THIS WORK. ALL WORK TO BE INSTALLED PER LOCAL CODE REQUIREMENTS AND MANUFACTURE'S SPECIFICATIONS.
4. PRESSURIZE MAINLINE TO 150 PSI FOR A PERIOD OF 1 HOUR CHECK ALL JOINTS AND CONNECTIONS FOR LEAKS AND REPAIR AS REQUIRED. PROVIDE WRIITEN DOCUMENTATION THAT A PRESSURE TEST HAS BEEN COMPLETED WITH NO MORE THAN 5 PSI LOSS DURING THE TEST DURATION.
5. UPON THE COMPLETION OF IRRIGATION WORK, OPERATE THE SYSTEM IN THE PRESENCE OF THE OWNERS REPRESENTATIVE. ADJUST AS REQUIRED.
6. GUARANTEE ALL MATERIALS AND WORKMANSHIP FOR A PERIOD OF ONE YEAR COMMENCING AT THE TIME OF FINAL ACCEPTANCE. THIS GUARANTEE DOES NOT APPLY TO WORK OR DAMAGE DONE TO THE IRRIGATION SYSTEM BY OTHERS AFTER FINAL ACCEPTANCE.
7. PRIOR TO FINAL ACCEPTANCE PROVIDE THE OWNER WITH A SET OF CLEARLY DRAWN ELECTRONIC AND REPRODUCIBLE RECORD DRAWINGS SHOWING ACTUAL LOCATION AND TYPE OF IRRIGATION ELEMENTS INSTALLED.
8. IRRIGATION CONTRACTOR SHALL PROVIDE PROTECTION OF ALL PROPERTY, PERSONS, WORK IN PROGRESS, STRUCTURES, UTILITIES, WALKS, CURBS, PAVED SURFACES AND EXISTING LANDSCAPE AND IRRIGATION TO REMAIN DURING THE INSTALLATION OF LANDSCAPE AND IRRIGATION WORK. VERIFY LOCATIONS OF ALL UNDERGROUND UTILITIES PRIOR TO COMMENCEMENT OF WORK AND PROTECT SAID UTILITIES.
9. PROVIDE (1) 15 GAL. SLOW RELEASE WATERING BAG FOR EACH NEW TREE PLACED IN EXISTING R.O.W. PLANTER STRIP. WATERING BAG TO BE TREEGATOR ORIGINAL SLOW RELEASE WATERING BAG (WWW.TREEGATOR.COM) OR APPROVED EQUAL.

IRRIGATION PLAN

0 10' 20' 40' 80'

SCALE: 1" = 20' - 0"

SHEET SIZE: 24" x 36" AT 100%

WBLA
Landscape Architecture
Site Planning Irrigation
16630 30th Dr. S.E.
Bothell, WA 98012
phone (425) 417-6029

PROJECT:
ARENA SPORTS

LOCATION:
MILL CREEK, WA

CLIENT:
CSA REAL ESTATE, LLC
6840 FORT DENT WAY
SEATTLE, WA 98188

NO.	DATE	REVISION
	09.20.2016	PERMIT

DESIGNED CB
DRAWN CB
CHECKED CB

PROFESSIONAL SEAL
STATE OF WASHINGTON REGISTERED LANDSCAPE ARCHITECT
WILLIAM A. BROWN
CERTIFICATE NO. 501

DATE 08.29.2016

PROJECT NO. 201630

TITLE
IRRIGATION PLAN

SHEET NUMBER
L-4

© WBLA 2015

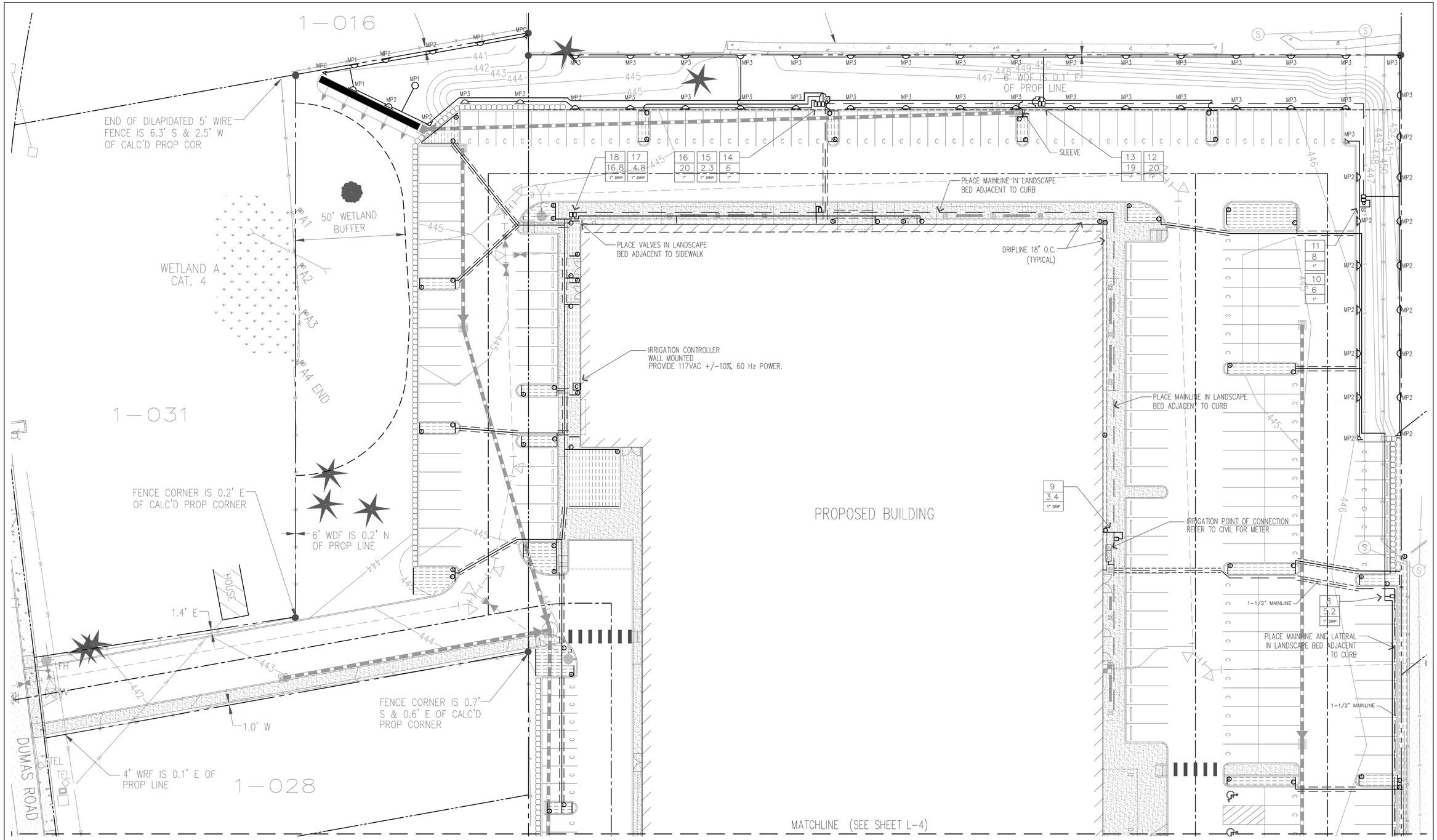

IRRIGATION PLAN

0 10' 20' 40' 80'

SCALE: 1" = 20' - 0"

SHEET SIZE: 24" x 36" AT 100%

WBLA Landscape Architecture Site Planning Irrigation
16630 30th Dr. S.E.
Bothell, WA 98012
phone (425) 417-6029

PROJECT:
ARENA SPORTS

LOCATION:
MILL CREEK, WA

CLIENT:
CSA REAL ESTATE, LLC
6840 FORT DENT WAY
SEATTLE, WA 98188

NO.	DATE	REVISION
	09.20.2016	PERMIT

DESIGNED CB
DRAWN CB
CHECKED CB

PROFESSIONAL SEAL

STATE OF WASHINGTON
REGISTERED
LANDSCAPE ARCHITECT
WILLIAM A. BROWN
CERTIFICATE NO. 501

DATE 08.29.2016

PROJECT NO. 201630

TITLE
IRRIGATION PLAN

SHEET NUMBER
L-5

© WBLA 2015

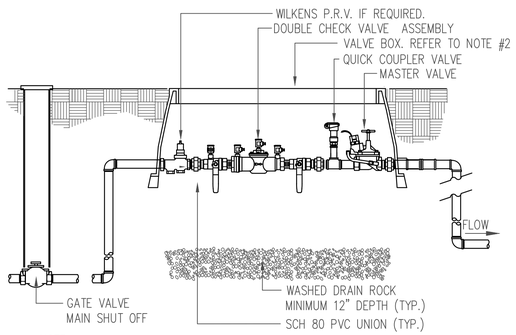

NOTE:
1. INSTALLATION SHALL CONFORM WITH CITY OF FIFE STANDARDS. REVIEW CURRENT CITY STANDARDS.
2. FOR 3/4" & 1" DEVICES, CARSON JUMBO BOXES FOR 1-1/2" & 2" DEVICES, INSTALL FOG TITE #2 REINFORCED CONCRETE BOXES

1 POINT OF CONNECTION
NTS

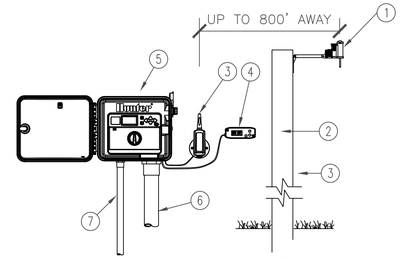

1. MODEL: WIRELESS SOLAR SYNC SENSOR, MOUNT UP TO 800' FROM RECEIVER
2. MOUNT SENSOR ON ROOF PARPIT ABOVE CONTROLLER LOCATION WHERE SENSOR CAN RECEIVE FULL SUN, IS OPEN TO RAINFALL.
3. WIRELESS SOLAR SYNC RECEIVER MOUNTED ON THE WALL NEXT TO THE CONTROLLER CABINET
4. MODEL: SOLAR SYNC MODULE MOUNT LESS THAN 6' AWAY FROM CONTROLLER
5. HUNTER I-CORE CONTROLLER WALL MOUNTED
6. VALVE CONTROL WIRE CONDUIT TO EXTERIOR LANDSCAPE BED
7. 1/2" POWER SUPPLY CONDUIT J-BOX INSIDE CONTROLLER CONNECT PER LOCAL CODE

NOTE
MOUNT CONTROLLER WITH LCD SCREEN AT EYE LEVEL. CONTROLLER SHALL BE HARD-WIRED TO GROUNDED 110 or 220 VAC SOURCE.

2 IRRIGATION CONTROLLER
NTS

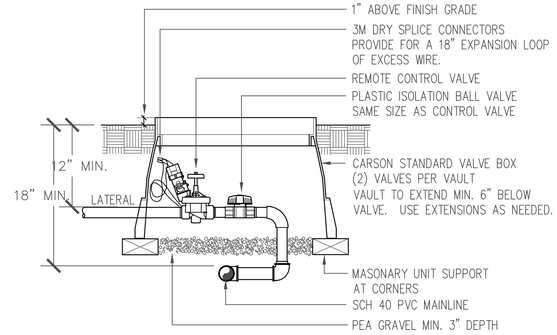

NOTES:
1. VALVE BOX SHALL NOT REST ON PIPES.
2. ALL PIPE AND FITTINGS WITHIN VAULT TO BE SCH 40 PVC SAME SIZE AS OUTLET LATERAL PIPE.
3. PROVIDE EXPANSION COILS AT EACH WIRE CONNECTION IN VALVE BOX.
4. COMPACT SOIL AROUND VALVE BOX TO SAME DENSITY AS UNDISTURBED ADJACENT SOIL.
5. PROVIDE VALVE BOX EXTENSIONS AS REQUIRED.
6. TAPE CONTROL WIRES AND SPARE TO BOTTOM OF MAINLINE (TYPICAL).

3 AUTOMATIC VALVE
NTS

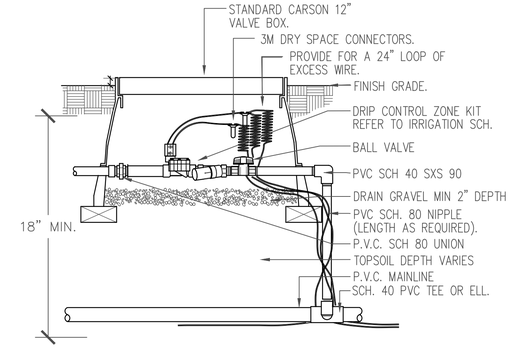

NOTES:
1. VALVE BOX SHALL NOT REST ON PIPES.
2. ALL PIPE AND FITTINGS WITHIN VAULT TO BE SCH 40 PVC SAME SIZE AS OUTLET LATERAL PIPE.
3. PROVIDE EXPANSION COILS AT EACH WIRE CONNECTION IN VALVE BOX.
4. COMPACT SOIL AROUND VALVE BOX TO SAME DENSITY AS UNDISTURBED ADJACENT SOIL.
5. PROVIDE VALVE BOX EXTENSIONS AS REQUIRED.
6. TAPE CONTROL WIRES AND SPARE TO BOTTOM OF MAINLINE (TYPICAL).

4 DRIP CONTROL ZONE
NTS

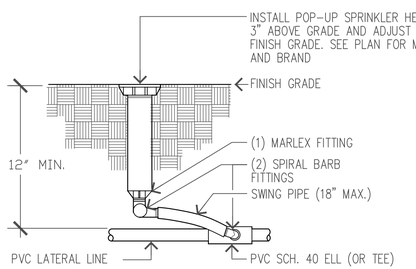

5 POP-UP HEAD
NTS

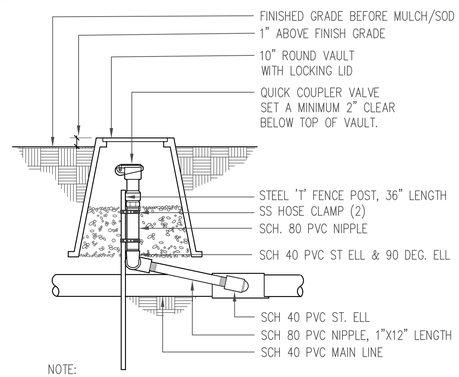

NOTE:
1. VALVE BOX SHALL NOT REST ON PIPES.
2. VALVE TO BE SET PLUM & CENTERED IN VALVE BOX.
3. PROVIDE DRAIN ROCK TO A MINIMUM DEPTH OF 6".
4. CONTRACTOR TO PROVIDE (1) EACH QCV KEY AND SWIVEL HOSE ELL.

6 QUICK COUPLER VALVE
NTS

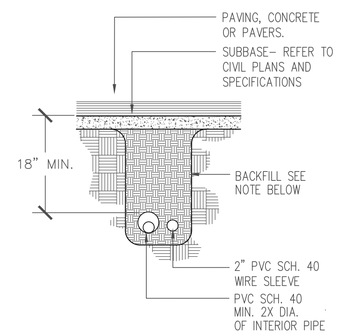

NOTE:
1. BACKFILL TO BE FREE OF ROCK OR DEBRIS LARGER THAN 1" DIA. ABSOLUTELY NO ROCK OR DEBRIS SHALL BE PLACED DIRECTLY ADJACENT TO ANY PIPE.
2. REPLACE DISTURBED OR DAMAGED LANDSCAPE.

7 SLEEVING
NTS

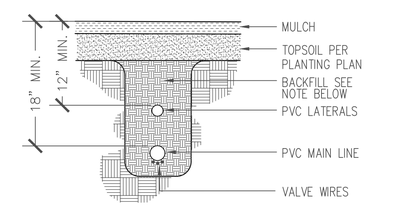

NOTE:
1. BACKFILL TO BE FREE OF ROCK OR DEBRIS LARGER THAN 1" DIA. ABSOLUTELY NO ROCK OR DEBRIS SHALL BE PLACED DIRECTLY ADJACENT TO ANY PIPE.
2. REPLACE DISTURBED OR DAMAGED LANDSCAPE.

8 PIPE TRENCHING
NTS

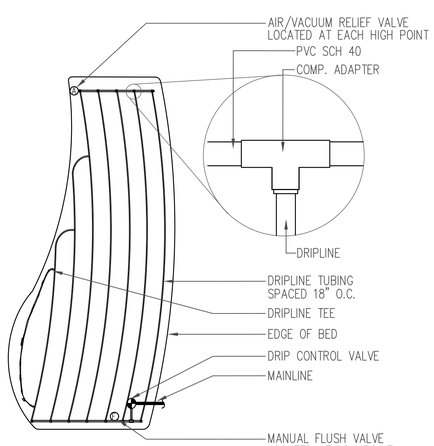

9 DRIPLINE LAYOUT
NTS

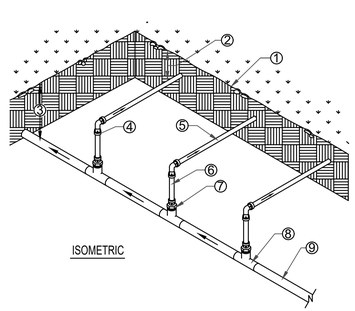

1. FINISH GRADE OF TOPSOIL
2. MIN. DEPTH OF 2" BELOW TOPSOIL FINISH GRADE
3. DEPTH OF PVC SUPPLY MANIFOLD MINIMUM 12"
4. COMPRESSION FITTINGS FOR 90's AND TEE'S
5. DRIPLINE
6. BLANK POLY TUBING LENGTH AS NEEDED
7. 1/2" MTP ADAPTER
8. PVC TEE (SxSxT) WITH 1/2" FPT
9. PVC SUPPLY MANIFOLD FROM DRIP ZONE KIT

NOTES:
1. INSTALLATION TO BE COMPLETED IN ACCORDANCE WITH MANUFACTURERS SPECIFICATIONS.
2. AIR/VACUUM RELIEF VALVE TO BE PLACED ON BLANK TUBING AT HIGH POINT OF DRIPLINE.

10 DRIPLINE HEADER
NTS

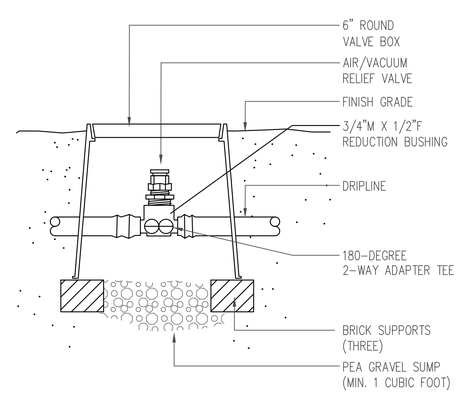

11 AIR / VACUUM RELIEF VALVE
NTS

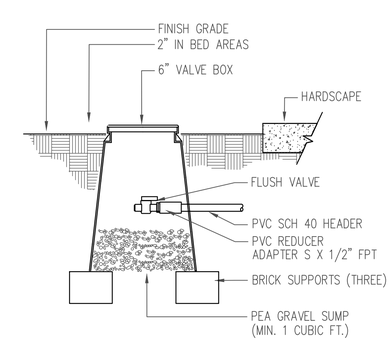

12 FLUSH VALVE
NTS

© WBLA 2015

SHEET SIZE: 24" x 36" AT 100%

WBLA Landscape Architecture Site Planning Irrigation
16630 30th Dr. S.E.
Bothell, WA 98012
phone (425) 417-6029

PROJECT:
ARENA SPORTS

LOCATION:
MILL CREEK, WA

CLIENT:
CSA REAL ESTATE, LLC
6840 FORT DENT WAY
SEATTLE, WA 98188

NO.	DATE	REVISION
	09.20.2016	PERMIT

DESIGNED CB
DRAWN CB
CHECKED CB

PROFESSIONAL SEAL
STATE OF WASHINGTON
REGISTERED
LANDSCAPE ARCHITECT
WILLIAM A. BROWN
CERTIFICATE NO. 501

DATE 08.29.2016
PROJECT NO. 201630

TITLE
IRRIGATION DETAILS

SHEET NUMBER
L-6