Preliminary Drainage Report

for

Arena Sports Mill Creek

Prepared for

CSA Real Estate, LLC.
9040 Willows Road, Suite 102
Redmond, WA 98052
(206) 849-6285

Prepared by

Land Development Consultants, Inc
14201 NE 200th Street
Suite 100
Woodinville, WA 98072
(425) 806-1869

December 1, 2016
Job No: 16-115

TABLE OF CONTENTS

Section	Title
1	Project Overview
2	Conditions and Requirements Summary
3	Off-site / Upstream and Downstream Analysis
4	Permanent Stormwater Control Plan
5	Conveyance System Analysis and Design
6	Special Reports and Studies
7	Other Permits
8	Bond Quantities Worksheet
9	Erosion and Sediment Control Analysis and Design
10	Operations and Maintenance Manual

1.0 PROJECT OVERVIEW

The proposed Arena Sports Mill Creek project is located approximately one block north of the intersection of Dumas Road and Bothell-Everett Highway at 13518 Bothell-Everett Highway in Mill Creek, Washington. Specifically, the project lies within the northeast quarter, Section 31, Township 28 N, Range 5 East, W.M., as shown in Figure 1 (this section).

Though the existing site contains a residence and ancillary structures, its existing land cover is predominately lawn and landscaped area and forest totaling 6.73 acres, and is considered a "new development". Of the 6.73 acres 6.48 acres will be disturbed. The undisturbed area (0.25 acres) is located along the western property boundary, and contains a 0.17 acre wetland buffer to an offsite wetland (Wetland A).

The proposed site will be a commercial development. This commercial development will include a multi-use sports building, driveways, parking lot for all the building, landscaping, and associated utilities. See sheet GR-01 in this section for the proposed site layout.

Existing drainage on the site is characterized by a basin draining west (Wetland A Basin) to Dumas Road (ultimately tributary to Sitka Creek, a small tributary of North Creek), and a basin draining south (527 Basin) toward SR 527 (tributary to Mill Creek, a small tributary of North Creek). There are no area-specific requirements for either of these watersheds/basins. See Figure 6 in Section 4 for visual representation of the existing basins.

The west draining basin (Wetland A Basin) currently sheet flows over the western property line into a wetland area on an adjacent residential property. The flow is then routed by culvert into the existing storm conveyance system within Dumas Road. The existing Dumas Road drainage infrastructure, constructed in 2005, is shallow (<2.0ft) 8-inch ductile iron (DI) conveyance. Additionally, the Dumas Road storm infrastructure controls the wetland (Wetland A) water surface elevation on the residential property between Dumas Road and the proposed Arena Sports Mill Creek

development. The "historic" Dumas Road discharge course was limited in its functionality with the construction of the Dumas Road drainage infrastructure, and cannot be used directly as a developed condition discharge. See the Downstream Analysis discussion in Section 3 for more detailed discussion of the Dumas Road system limitations. See Figure 5 in Appendix 3-A for visual representation of the downstream flow path.

Sufficient Developed Condition area (0.45 acres) will be directed toward the wetland so that runoff from this area will match the existing condition 2-yr storm event runoff (all less-frequent storm event discharges will be below existing condition), all other developed area will be routed south and considered part of the historic southerly basin discharge (into the existing system located within SR-527).

6.11 acres of the proposed development drains to the south (527 Basin). This represents the bulk of the proposed development. Approximately 5.78 acres is subject to water quality and flow control; 0.33 acres within a 35ft landscape buffer along the SR-527 frontage is currently landscaped, and while this area will be graded and re-landscaped such that it will not be "converted" and so is not subject to flow control. The 5.78 acres remaining is made up of approximately 5.36 acres of impervious cover, 0.35 acres of pervious cover, and a 0.07 acre area of bypass. See Figure 7 in Section 4 for visual representation of the developed hydrology.

According to the Soil Conservation Service soil survey for Snohomish County, the proposed commercial development area of the site is underlain by Alderwood gravelly sandy loam. See Appendix 1-A for the attached Snohomish County SCS soil map and soil description.

Flow control for the proposed development will be accomplished with a detention facility consisting of 7-ft diameter corrugated metal pipe (CMP) designed according to the City of Mill Creek requirements, and Department of Ecology 2005 Western Washington Stormwater Management Manual (DOE Manual). The detention facility will discharge stormwater to a biofiltration system (i.e., modular wetland) for enhanced treatment. The modular wetland will be located under a parking island near the southern corner of the property. The treated and detained runoff will be discharged

into the existing storm drainage system along SR-527. See sheet GR-01 in this section for visual representation of the proposed onsite stormwater system and discharge location.

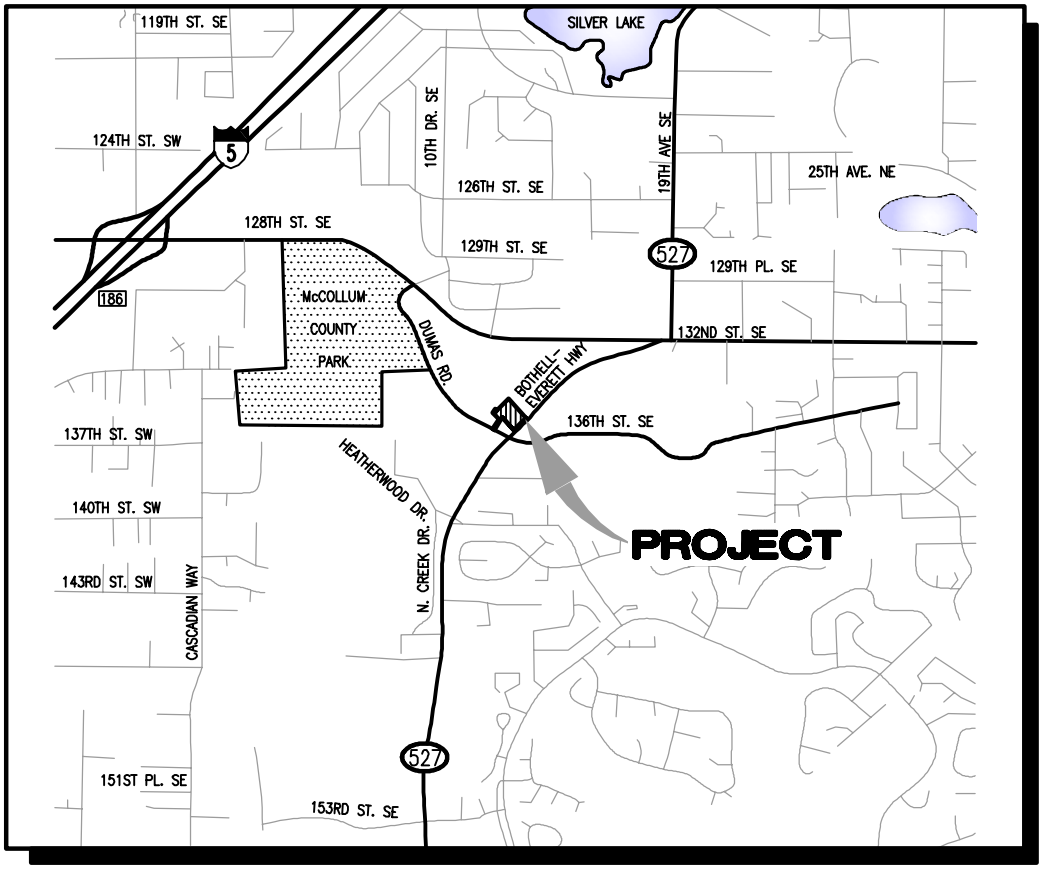

VICINITY MAP

SCALE: 1"=2000'

Drawing: P:\2016\16-115 Mill Creek Commercial\Exhibits\16115E-VM.dwg Plotted: Sep 20, 2016 - 9:59am

LDC
THE CIVIL ENGINEERING GROUP

Engineering
Structural
Planning
Survey

14201 NE 200th St., #100
Woodinville, WA 98072

Ph. 425.806.1869
Fx. 425.482.2893

www.LDCcorp.com

CSA REAL ESTATE, LLC

ARENA SPORTS MILL CREEK

Figure 1

VICINITY MAP

A PORTION OF THE NE 1/4 OF SECTION 31, TWP. 28 N., RGE. 5 E., W.M., CITY OF MILL CREEK, SNOHOMISH COUNTY, WASHINGTON

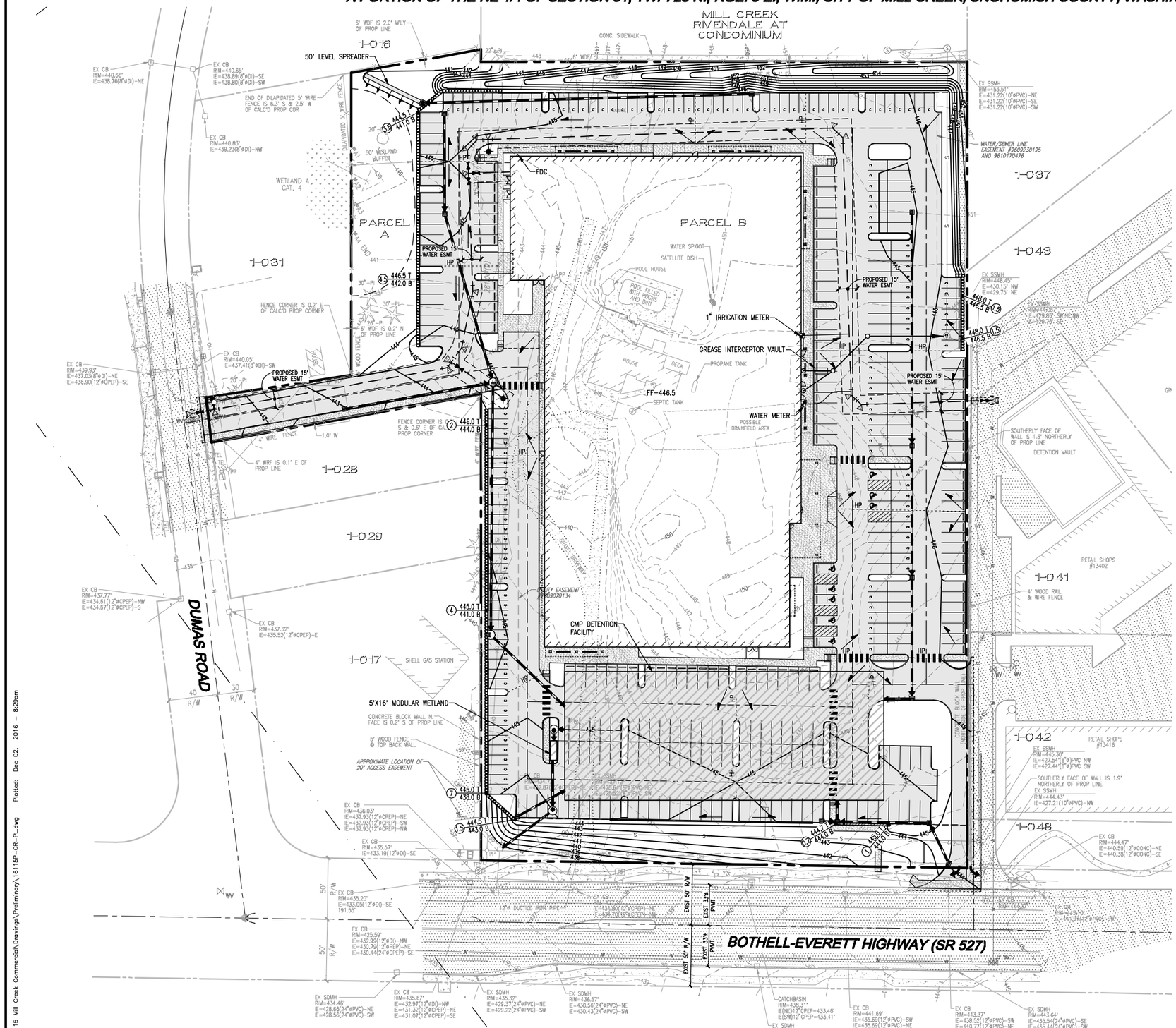

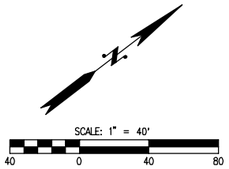

LEGEND

- STORM PIPE
- SEWER PIPE
- WATER PIPE
- CLEARING AREA / PROTECTED AREA — CLEARING LIMITS
- PAVEMENT FLOW DIRECTION
- HP — HIGH POINT
- LP — LOW POINT
- RETAINING WALL
- ROCKERY WALL

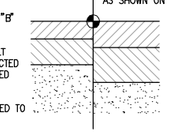

ON-SITE ASPHALT PAVEMENT SECTION OPTIONS
NOT TO SCALE

NOTES

1. SEE BINDING SITE PLAN BY LDC, INC. FOR DIMENSIONED SITE PLAN.
2. ALL EXISTING STRUCTURES TO BE REMOVED.

EARTHWORK QUANTITIES

CUT: 22,000 CY
FILL: 22,000 CY

BOUNDARY DISCLAIMER

THE BOUNDARY SURVEY WAS PERFORMED BY LDC, INC. IN MAY 2013. ANY CHANGES TO THE SITE AFTER THIS DATE WILL NOT BE REFLECTED IN THE PLANS. ANY DISCREPANCIES FOUND BETWEEN WHAT IS SHOWN ON THE PLANS AND WHAT IS NOTED IN THE FIELD SHOULD BE BROUGHT IMMEDIATELY TO THE ATTENTION OF THE ENGINEER.

TOPOGRAPHIC DISCLAIMER

TOPOGRAPHIC SURVEY INFORMATION CONTAINED ON THESE PLANS HAS BEEN PROVIDED BY CORNERSTONE ENGINEERING, INC. LDC, INC. (LAND DEVELOPMENT CONSULTANTS, INC.) ASSUMES NO LIABILITY AS TO THE ACCURACY AND COMPLETENESS OF THIS DATA. ANY DISCREPANCIES FOUND BETWEEN WHAT IS SHOWN ON THE PLANS AND WHAT IS NOTED IN THE FIELD SHOULD BE BROUGHT IMMEDIATELY TO THE ATTENTION OF THE ENGINEER.

Call 2 Business Days Before You Dig
811 or 1-800-424-5555
Utilities Underground Location Center

REVISIONS

NO.	DATE	DESCRIPTION	BY
1	12-01-16	REVISED PER CITY COMMENTS	MEV

LDC
THE CIVIL ENGINEERING GROUP
Engineering
Structural
Planning
Survey
20210 142nd Avenue NE
Woodinville, WA 98072
Ph. 425.806.1089
Fx. 425.482.2893
www.LDCcorp.com

CSA REAL ESTATE, LLC

ARENA SPORTS MILL CREEK

PRELIMINARY GRADING AND UTILITY PLAN

MARK E. VILLANUEVA — STATE OF WASHINGTON — 40908 — REGISTERED PROFESSIONAL ENGINEER — 11-01-16

JOB NUMBER:	16-115
DRAWING NAME:	16115P-GR-PL
DESIGNER:	MEV
DRAFTING BY:	BPC
DATE:	9-27-16
SCALE:	1"=40'
JURISDICTION:	MILL CREEK

GR-01

SHEET 4 OF 6

Drawing: P:\2016\16-115 Mill Creek Commercial\Drawings\Preliminary\16115P-GR-PL.dwg Plotted: Dec 02, 2016 - 8:29am

APPENDIX 1-A

SCS SOIL SURVEY MAPPING

Soil Map—Snohomish County Area, Washington
(Arena Sports)

Map Scale: 1:1,830 if printed on A landscape (11" x 8.5") sheet.

N

Meters: 0 25 50 100 150

Feet: 0 50 100 200 300

Map projection: Web Mercator Corner coordinates: WGS84 Edge tics: UTM Zone 10N WGS84

MAP LEGEND

Area of Interest (AOI)

Area of Interest (AOI)

Soils

Soil Map Unit Polygons

Soil Map Unit Lines

Soil Map Unit Points

Special Point Features

Blowout

Borrow Pit

Clay Spot

Closed Depression

Gravel Pit

Gravelly Spot

Landfill

Lava Flow

Marsh or swamp

Mine or Quarry

Miscellaneous Water

Perennial Water

Rock Outcrop

Saline Spot

Sandy Spot

Severely Eroded Spot

Sinkhole

Slide or Slip

Sodic Spot

Spoil Area

Stony Spot

Very Stony Spot

Wet Spot

Other

Special Line Features

Water Features

Streams and Canals

Transportation

Rails

Interstate Highways

US Routes

Major Roads

Local Roads

Background

Aerial Photography

MAP INFORMATION

The soil surveys that comprise your AOI were mapped at 1:24,000.

Warning: Soil Map may not be valid at this scale.

Enlargement of maps beyond the scale of mapping can cause misunderstanding of the detail of mapping and accuracy of soil line placement. The maps do not show the small areas of contrasting soils that could have been shown at a more detailed scale.

Please rely on the bar scale on each map sheet for map measurements.

Source of Map: Natural Resources Conservation Service
Web Soil Survey URL: http://websoilsurvey.nrcs.usda.gov
Coordinate System: Web Mercator (EPSG:3857)

Maps from the Web Soil Survey are based on the Web Mercator projection, which preserves direction and shape but distorts distance and area. A projection that preserves area, such as the Albers equal-area conic projection, should be used if more accurate calculations of distance or area are required.

This product is generated from the USDA-NRCS certified data as of the version date(s) listed below.

Soil Survey Area: Snohomish County Area, Washington
Survey Area Data: Version 13, Sep 15, 2015

Soil map units are labeled (as space allows) for map scales 1:50,000 or larger.

Date(s) aerial images were photographed: Jul 7, 2014—Jul 8, 2014

The orthophoto or other base map on which the soil lines were compiled and digitized probably differs from the background imagery displayed on these maps. As a result, some minor shifting of map unit boundaries may be evident.

Map Unit Legend

Snohomish County Area, Washington (WA661)			
Map Unit Symbol	**Map Unit Name**	**Acres in AOI**	**Percent of AOI**
1	Alderwood gravelly sandy loam, 0 to 8 percent slopes	6.1	100.0%
Totals for Area of Interest		**6.1**	**100.0%**

Snohomish County Area, Washington

1—Alderwood gravelly sandy loam, 0 to 8 percent slopes

Map Unit Setting

National map unit symbol: 2t625
Elevation: 50 to 800 feet
Mean annual precipitation: 25 to 60 inches
Mean annual air temperature: 48 to 52 degrees F
Frost-free period: 160 to 240 days
Farmland classification: Prime farmland if irrigated

Map Unit Composition

Alderwood and similar soils: 85 percent
Minor components: 15 percent
Estimates are based on observations, descriptions, and transects of the mapunit.

Description of Alderwood

Setting

Landform: Ridges, hills
Landform position (two-dimensional): Summit
Landform position (three-dimensional): Crest, talf
Down-slope shape: Linear, convex
Across-slope shape: Convex
Parent material: Glacial drift and/or glacial outwash over dense glaciomarine deposits

Typical profile

A - 0 to 7 inches: gravelly sandy loam
Bw1 - 7 to 21 inches: very gravelly sandy loam
Bw2 - 21 to 30 inches: very gravelly sandy loam
Bg - 30 to 35 inches: very gravelly sandy loam
2Cd1 - 35 to 43 inches: very gravelly sandy loam
2Cd2 - 43 to 59 inches: very gravelly sandy loam

Properties and qualities

Slope: 0 to 8 percent
Depth to restrictive feature: 20 to 39 inches to densic material
Natural drainage class: Moderately well drained
Capacity of the most limiting layer to transmit water (Ksat): Very low to moderately low (0.00 to 0.06 in/hr)
Depth to water table: About 18 to 37 inches
Frequency of flooding: None
Frequency of ponding: None
Available water storage in profile: Very low (about 2.7 inches)

Interpretive groups

Land capability classification (irrigated): None specified
Land capability classification (nonirrigated): 4s
Hydrologic Soil Group: B

Other vegetative classification: Limited Depth Soils (G002XS301WA), Limited Depth Soils (G002XF303WA), Limited Depth Soils (G002XN302WA)
Hydric soil rating: No

Minor Components

Mckenna
Percent of map unit: 5 percent
Landform: Depressions, drainageways
Landform position (three-dimensional): Dip
Down-slope shape: Concave, linear
Across-slope shape: Concave
Hydric soil rating: Yes

Everett
Percent of map unit: 5 percent
Landform: Eskers, kames, moraines
Landform position (two-dimensional): Shoulder, summit
Landform position (three-dimensional): Interfluve, crest
Down-slope shape: Convex
Across-slope shape: Convex
Hydric soil rating: No

Shalcar
Percent of map unit: 3 percent
Landform: Depressions
Landform position (three-dimensional): Dip
Down-slope shape: Concave
Across-slope shape: Concave
Hydric soil rating: Yes

Norma
Percent of map unit: 2 percent
Landform: Depressions, drainageways
Landform position (three-dimensional): Dip
Down-slope shape: Concave, linear
Across-slope shape: Concave
Hydric soil rating: Yes

Data Source Information

Soil Survey Area: Snohomish County Area, Washington
Survey Area Data: Version 13, Sep 15, 2015

2.0 CONDITIONS AND REQUIREMENTS SUMMARY

Existing Conditions Summary

There are currently two drainage basins on the site. The first flows west towards Dumas Road (Wetland A Basin). The second flows south towards Bothell-Everett Highway (527 Basin). See Figure 6, Existing Hydrology Map in Section 4 for visual representation of existing hydrology.

Requirements Summary

This project is designed under the 2005 Ecology Manual as modified by the Western Washington Phase II Municipal Stormwater Permit (DOE Manual). Though a residence exists on the property currently, this project will be considered a new-development; all area subject to water quantity and quality controls will be modeled as forested.

Approximately 6.48 acres will be disturbed with the proposed development, and will be subject to Minimum Requirements 1-5. Of this disturbed area 5.78 acres are subject to minimum requirements 1-10. 0.33 acres within the landscape buffer is landscaped in the existing condition, is not considered converted, and is not subject to minimum requirements 6-10.

A 0.45 acre area will remain tributary to Wetland A in the developed condition to maintain wetland hydration only. The wetland hydration area does not meet the thresholds for minimum requirements 6-10 as it is less than 3/4-acres, has less than 5,000sf impervious area, and all developed condition flows are less than the flows contributing to the wetland in the existing condition (the 2-year developed runoff rate is within 5% of the existing condition).

The minimum requirements are addressed as follows:

Requirement #1: Preparation of Stormwater Site Plans

This drainage report, and the construction documents contains all of information and requirements for Stormwater Site Plans listed in Chapter 3, Volume I of the 2005 Ecology Manual.

Requirement #2: Construction Stormwater Pollution Prevention Plan (SWPPP)

A construction SWPPP will be completed as a separate document.

Requirement #3: Source Control of Pollution

There are no hazardous materials proposed to be on site that would require the use of source control BMPs.

Requirement #4: Preservation of Natural Drainage System and Outfalls

Natural drainage patterns will be maintained and discharges from the project site will occur at the natural location. The proposed discharge of the site's runoff will not cause significant adverse impact to downstream receiving waters and down gradient properties. The proposed runoff control facilities will provide the required flow control and water quality treatment.

Requirement #5: On-Site Stormwater Management

The existing on-site soils are cemented glacial-till, and the infiltration rate identified by geotechnical analysis is insufficient to support bio-retention, downspout infiltration, pervious paving, and all other LIB BMP's with the exception of BMP T5.13 (soils amendment of non-impervious covered soils). BMPT5.13 will be implemented on all disturbed ground area to be landscaped.

Requirement #6: Runoff Treatment

See Section 4.5 of this report for detailed discussion of the modular wetland design and evaluation.

Requirement #7: Flow Control

See Section 4 of this report for detailed discussion on site hydrology, detention designs, and modeling results.

Requirement #8: Wetlands Protection

Per site wetland investigations there are no wetland areas on site. A wetland area (Wetland A) exists immediately adjacent and west of proposed development project within a residential property. A 50-ft wetland buffer is located on the project site

associated with this wetland area. See Section 4 of this report regarding the developed acreage draining to the wetland to maintain hydration.

Requirement #9: Basin/Watershed Plans

There are no basin/watershed plans applicable to the basins within which the site exists.

Requirement #10: Operation and Maintenance Plan

A Maintenance and Operations Manual has been created for this project. Please refer to Appendix 7-A in Section 7 for this document.

3.0 OFF-SITE ANALYSIS

A downstream analysis for the Arena Sport Mill Creek site was performed in October 2004, updated/confirmed in March 2005, again in May 2013, and verified in August 2016. Figure 1 of this document contains an exhibit showing the general vicinity of the project site. There is also an outline of the downstream flow path. The downstream flow path was examined for a quarter mile past each basin's property line.

Downstream Analysis

There are currently two drainage basins on the site. Basin 527 drains south towards Bothell-Everett Highway (SR-527) and Wetland A Basin drains west towards the offsite wetland (Wetland A) and Dumas Road. See Figure 5, Downstream Analysis Map, in Appendix 3-A for a detailed map of the downstream flow paths.

Basin 527

Before it is collected along the southeast property line, the runoff for Basin 527 occurs as overland sheet flow. A ditch behind the sidewalk, along Bothell-Everett Highway, collects the runoff. Subsequently, the water travels southwest along Bothell-Everett Highway through an 8-inch DI driveway culvert.

The water then enters a Type 1 catch basin in the southerly property corner. Puddling was observed in the area of the catch basin, due to inconsistent grading.

After the water enters the catch basin, it is passed into a conveyance system in Bothell-Everett Highway. This conveyance system is separate from the conveyance system collecting runoff from Bothell-Everett Highway. It appears that the only other conveyed upstream drainage is the Safeway development northeast of the site. The conveyance system then carries the storm runoff in a piped system to the southwest in Bothell-Everett Highway until it reaches 138th Street SE. It then turns east along 138th Street SE where it is then conveyed to the south and discharged to a pond/wetland area in Mill Creek Village.

The 24-inch pipe that discharges stormwater into the wetland was submerged to its top. There appeared to be permanent ponding in the wetland area. A constructed outlet is situated at the southern end of the wetland along Trillium Boulevard.

No erosion or capacity problems were observed.

Wetland A Basin

Site runoff toward Wetland A is overland sheet flow until it reaches the wetland, where capacity and elevation differential of the collection pipe for the Dumas Road System creates ponding within the wetland. The wetland water surface elevation on the residential property varies with capacity in the Dumas Road storm system. Once collected in the Dumas Road storm system, flows travel within Dumas Rd to the northwest. The runoff is treated in a filter vault before it is discharged into a wetland on Dumas Road's west side. The downstream wetland was observed with standing water. The ponding may be seasonal. This ponding flows out into a natural area. Within the natural area, a nature/walking path exists; under which two 12-inch culverts convey the flow to Sitka Creek.

Dumas Road Storm System

To avoid impacting existing utility installations and other in-ROW conflicts, the City of Mill Creek constructed a shallow 8-inch DI conveyance system in Dumas Road. This existing system does not have sufficient capacity to accept the fully developed overflow from the developed condition, or sufficient depth to receive mitigated flows. To minimize the varying wetland/ponding elevation resulting from the shallow and under-sized nature of the existing system in Dumas Road, developed flows will be directed to the wetland sufficient to maintain the wetland hydration only during the 2-yr storm. All additional developed area will be considered part of Basin 527.

APPENDIX 3-A

DOWNSTREAM

ANALYSIS & MAPPING

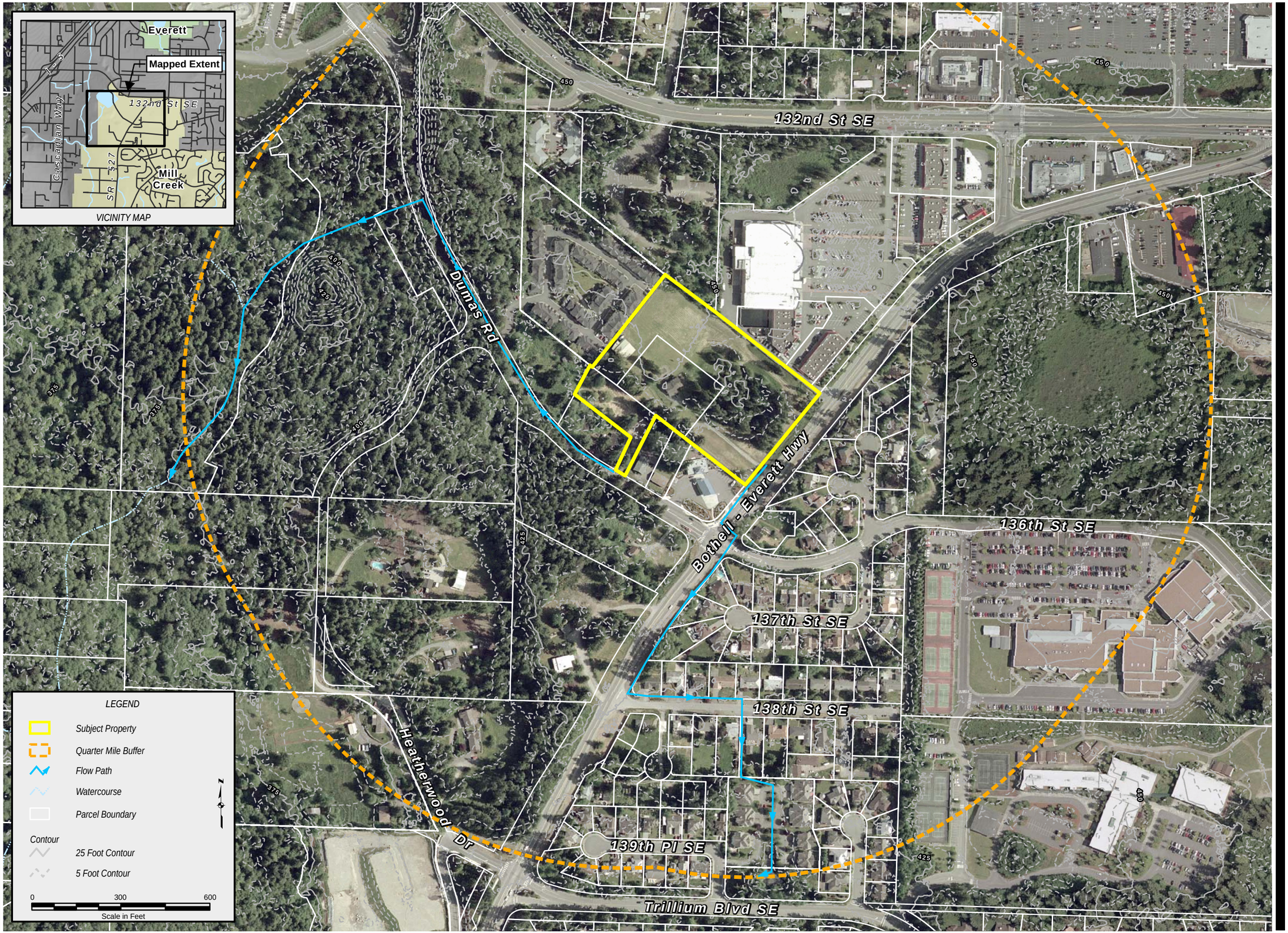

16-115F05.mxd | MOD: 9/20/2016 TPA

SOURCE INFORMATION

SOURCE AGENCY	DESCRIPTION
USDA	1 MR COLOR AERIAL PHOTOGRAPHY (2009)
SNOHOMISH COUNTY GIS	PARCEL BOUNDARY
KING COUNTY GIS	FIVE FOOT CONTOUR - GENERATED FROM BARE EARTH LIDAR (KING COUNTY). THIS DATA HAS A STATED VERTICAL ACCURACY OF APPROXIMATELY 1 FOOT.

LDC
THE CIVIL ENGINEERING GROUP
14201 NE 200th St, #100
Woodinville, WA 98072
Ph. 425.806.1869
Fx. 425.482.2893
www.LDCcorp.com

Commercial
Infrastructure
Residential

CSA REAL ESTATE

ARENA SPORTS MILL CREEK

DOWNSTREAM ANALYSIS MAP

PROJECTION: WASHINGTON STATE PLANE, NORTH ZONE, NAD 83, FEET

REVISION:
JOB NUMBER: 16-115
DRAWING NAME: 16-115F05
DESIGNER: A. BENTON
DRAWING BY: I.MIERAU
DATE: 05-22-13
SCALE: AS SHOWN
JURISDICTION: MILL CREEK

FIGURE:
5.0

4.0 PERMANENT STORMWATER CONTROL PLAN

The drainage analysis was modeled using the Western Washington Hydrology Model (WWHM) software. This continuous runoff methodology was used as outlined in the 2005 Department of Ecology Stormwater Management Manual for Western Washington (DOE Manual).

4.1 Pre-developed Site Hydrology

As discussed in the Project Overview (Section 1), there are two existing basins. Southerly draining Basin 527, and the existing Wetland A Basin. The existing Wetland A Basin (1.71 acres) is used to generate target wetland hydration flows for the developed condition hydration area only.

Wetland A

In the existing condition approximately 1.71 acres of onsite area drains to the offsite Wetland A. Given the size and elevation limitations of the existing Dumas Road system (discussed in the Downstream Conditions section), the majority of the developed condition area (1.26 acres) within the Wetland A Basin will be routed south to the SR 527 outfall, and considered part of the 527 Basin. Figure 6 shows the resulting existing condition map, and shows the existing Wetland A Basin which is used to evaluate matching developed flows (see Section 4.4 – Wetland Hydration).

The existing Wetland A basin is modeled in its existing condition per the DOE manual requirement for wetland hydration. A developed condition area sufficient to match the existing condition 2-year flow will be diverted to maintain wetland hydration, while all less frequent storm event runoff will be less than existing flows (see Section 4.4 – Wetland Hydration).

527 Basin

The area considered draining toward SR-527 is approximately 6.11 acres. 0.33 acres is within the landscape buffer for SR 527, is landscaped in the existing condition, and will not be converted in the proposed development. The remaining 5.78 acres is subject to flow and water quality controls. 5.71 Acres will be collected and detained

within the detention facility and will be identified as 527 Basin. A small bypass area at the proposed development western access to Dumas Road cannot be collected and treated due to the elevations relative to the proposed detention facility. This area will be accounted for by adding a 0.07 acre bypass basin to the WWHM modeling.

The entirety of 527 Basin is modeled in the pre-developed condition as forested per the DOE Manual requirement for new-development.

527 Basin	
Forest	5.71 Acres
Bypass	
Forest	0.07 Acres
Total tributary to detention:	**5.78 Acres**

Pre-developed flows:

The pre-developed condition for 527 Basin was modeled as forested as outlined in the City 2005 DOE Stormwater Management Manual for Western Washington.

527 Basin

Peak Flow Rates:

2-year	0.11 CFS
10-year	0.22 CFS
100-year	0.40 CFS

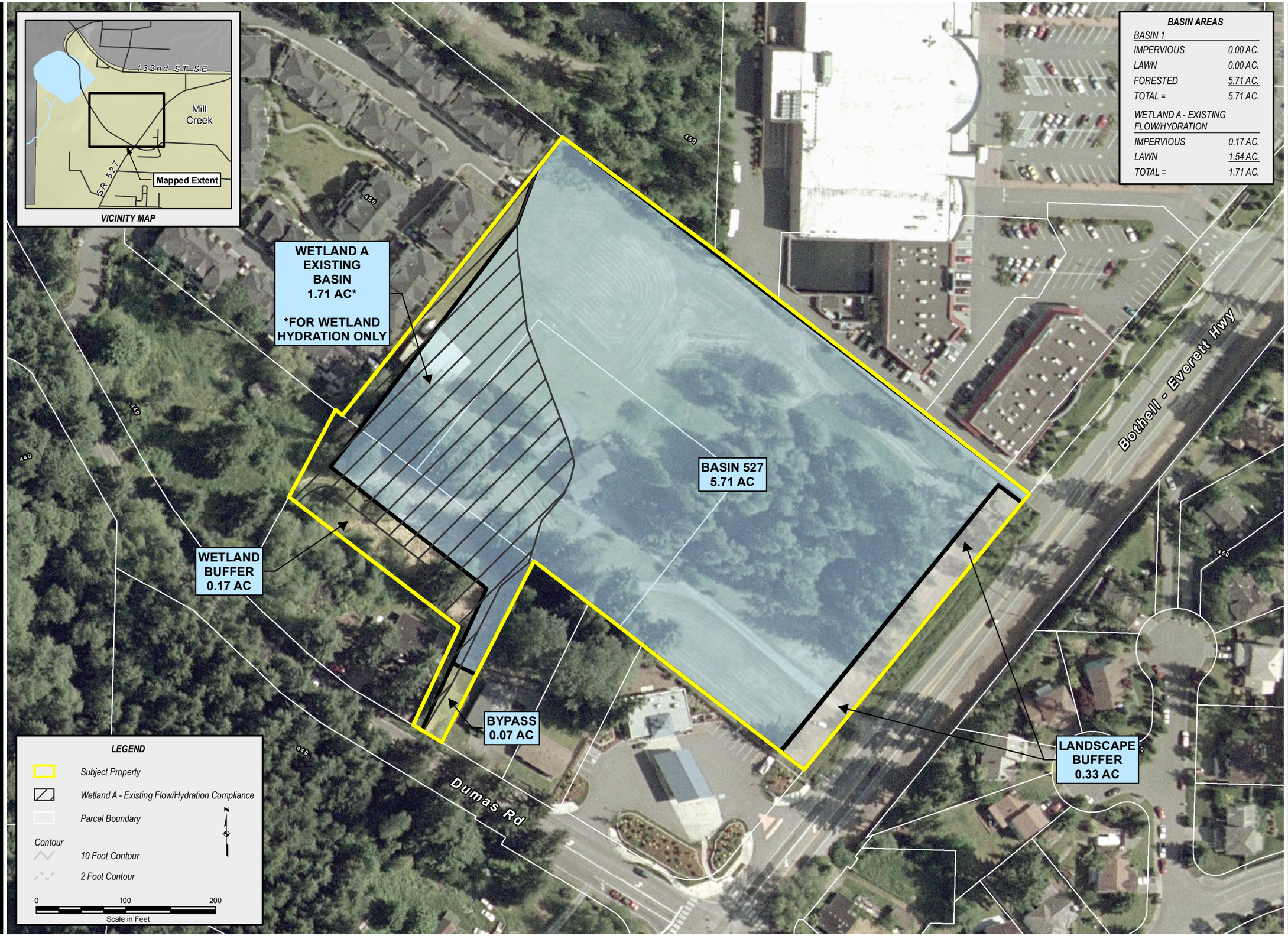

BASIN AREAS

BASIN 1	
IMPERVIOUS	0.00 AC.
LAWN	0.00 AC.
FORESTED	5.71 AC.
TOTAL =	5.71 AC.
WETLAND A - EXISTING FLOW/HYDRATION	
IMPERVIOUS	0.17 AC.
LAWN	1.54 AC.
TOTAL =	1.71 AC.

SOURCE INFORMATION

SOURCE AGENCY	DESCRIPTION
USGS	1 FOOT COLOR AERIAL PHOTOGRAPHY (2002)
SNOHOMISH COUNTY GIS	PARCEL BOUNDARY
KING COUNTY GIS	TWO FOOT CONTOUR - GENERATED FROM BARE EARTH LIDAR (KING COUNTY). THIS DATA HAS A STATED VERTICAL ACCURACY OF APPROXIMATELY 1 FOOT.

LDC
THE CIVIL ENGINEERING GROUP
14201 NE 200th St., #100
Woodinville, WA 98072
Ph. 425.806.1869
Fx. 425.482.2893
www.LDCcorp.com

Commercial
Infrastructure
Residential

CSA REAL ESTATE

ARENA SPORTS MILL CREEK

EXISTING SITE HYDROLOGY

PROJECTION: WASHINGTON STATE PLANE, NORTH ZONE, NAD 83, FEET

REVISION:
JOB NUMBER: 16-115
DRAWING NAME: 16-115F06
DESIGNER: A. BENTON
DRAWING BY: I.MIERAU
DATE: 09-19-16
SCALE: AS SHOWN
JURISDICTION: MILL CREEK

FIGURE:
6.0

16-115F06.mxd | MOD: 9/19/2016 | TPA

Basin Calcs	LDC, Inc.	
	142201 NE 200th St. # 100 Woodinville, WA 98072	Tel: (425) 806-1869 Fax: (425) 482-2893

Project Name:	Mill Creek Arena Sports	Project No.:	16-115
Description:	Pre-Developed Basin Calculations	Date:	9/19/2016
		Calc. By:	JMT

Pre-Developed

Wetland A

	Area (Acres)	Impervious (%)	Impervious (Acres)	Lawn (Acres)	Forested (Acres)
On-Site (Existing)	1.71	10%	0.16	1.54	0.00
Total	**1.71**	**10%**	**0.16**	**1.54**	**0.00**

Basin Calcs	LDC, Inc.	
	142201 NE 200th St. # 100 Woodinville, WA 98072	Tel: (425) 806-1869 Fax: (425) 482-2893

Project Name:	Mill Creek Arena Sports	Project No.:	16-115
Description:	Pre-Developed Basin Calculations	Date:	12/1/2016
		Calc. By:	JMT

Pre-Developed

527 Basin

	Area (Acres)	Impervious (%)	Impervious (Acres)	Lawn (Acres)	Forested (Acres)
On-Site (Existing)	5.71	0%	0	0	5.71
Total	**5.71**	**0%**	**0.00**	**0.00**	**5.71**

Bypass

	Area (Acres)	Impervious (%)	Impervious (Acres)	Lawn (Acres)	Forested (Acres)
On-Site (Existing)	0.07	0%	0	0	0.07
Total	**0.07**	**0%**	**0.00**	**0.00**	**0.07**
TOTAL AREA MODELED	**5.78**	**0%**	**0.00**	**0.00**	**5.78**

4.2 Developed Site Hydrology

The total amount of developed and disturbed area is approximately 6.48 acres. The developed commercial site includes a multi-purpose sports building, roadways, parking lots for all the building, landscaping, and associated utilities. 5.78 acres of this developed and disturbed area will be subject to the water quality and flow control. See Figure 7 in this section for the Developed Hydrology Map.

Approximately, 0.33 acres, along the frontage of Bothell-Everett Hwy (SR-527) will be disturbed but is not "converted" as its existing and developed vegetation/use will be identical. This area will be used for landscaping. 0.45 acres of the developed and disturbed area will remain tributary to Wetland A; such that developed runoff to the wetland matches the existing 2-yr flows draining to the wetland. This basin is not subject to minimum requirements #6 and #7 as the disturbed area within this basin is less than ¾ of an acre, the basin contains less than 5,000sf of new impervious cover (3,400sf new impervious cover) and the developed flow rates will be less than the existing flow rates (See Section 4.3).

The 5.71 acres subject to water quality and flow controls are contained within 527 Basin and will be routed to the underground detention located east of the proposed building. Detention location is shown on the site plan in Section 1. For modeling purposes, a 0.07 acre area of bypass was added to the model to account for a portion of the entrance off of Dumas Rd., which cannot be collected. Release from the underground detention will discharge to a modular wetland unit to provide water quality treatment.

Developed Conditions:

The proposed developed conditions include constructing a single recreational building along with associated parking lots and a conveyance system. The land use employed is from the 2005 DOE Stormwater Management Manual for Western Washington.

527 Basin

Impervious On-Site	5.36 Acres
Lawn On-Site	0.35 Acres

Onsite Bypass

Impervious	0.07 Acres

Mitigated Total

Impervious TOTAL	5.43 Acres
Lawn TOTAL	0.35 Acres

Total Area Modeled to Detention/Modular Wetland = 5.78 acres

Peak Combined Mitigated Flow Rate:

2-year	0.074 CFS
10-year	0.251 CFS
100-year	0.917 CFS

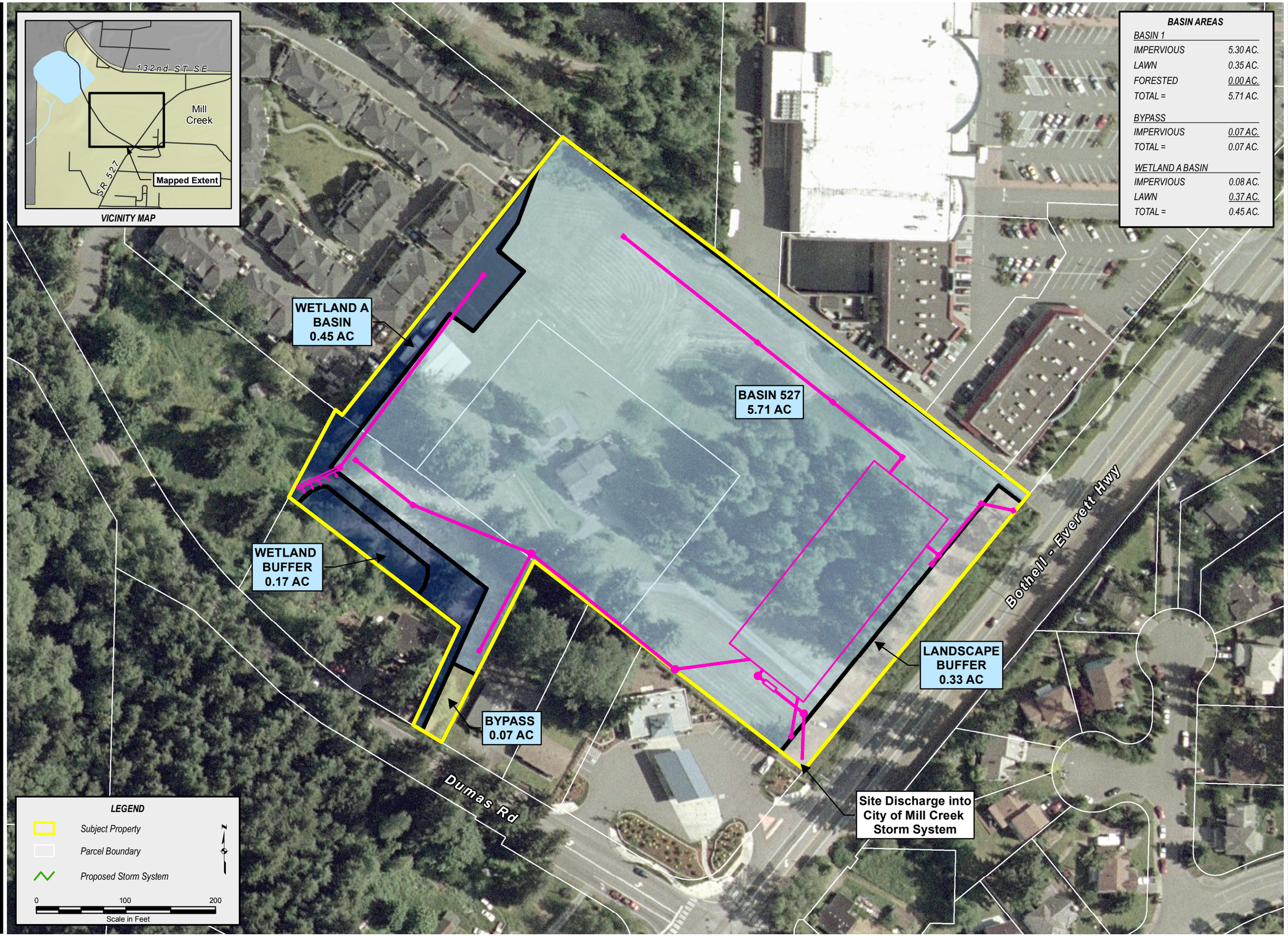

BASIN AREAS

BASIN 1	
IMPERVIOUS	5.30 AC.
LAWN	0.35 AC.
FORESTED	0.00 AC.
TOTAL =	5.71 AC.
BYPASS	
IMPERVIOUS	0.07 AC.
TOTAL =	0.07 AC.
WETLAND A BASIN	
IMPERVIOUS	0.08 AC.
LAWN	0.37 AC.
TOTAL =	0.45 AC.

SOURCE INFORMATION

SOURCE AGENCY	DESCRIPTION
USGS	1 FOOT COLOR AERIAL PHOTOGRAPHY (2002)
SNOHOMISH COUNTY GIS	PARCEL BOUNDARY

LDC
THE CIVIL ENGINEERING GROUP
14201 NE 200th St., #100
Woodinville, WA 98072
Ph. 425.806.1869
Fx. 425.482.2893
www.LDCcorp.com

Commercial
Infrastructure
Residential

CSA REAL ESTATE

ARENA SPORTS MILL CREEK

DEVELOPED SITE HYDROLOGY

PROJECTION: WASHINGTON STATE PLANE, NORTH ZONE, NAD 83, FEET

REVISION:
JOB NUMBER: 16-115
DRAWING NAME: 16-115F07
DESIGNER: A. BENTON
DRAWING BY: I.MIERAU
DATE: 09-19-16
SCALE: AS SHOWN
JURISDICTION: MILL CREEK

FIGURE:
7.0

16-115F07.mxd | MOD: 9/19/2016 | TPA

Basin Calcs	LDC, Inc.	
	142201 NE 200th St. # 100 Woodinville, WA 98072	Tel: (425) 806-1869 Fax: (425) 482-2893

Project Name:	Mill Creek Commercial Building	Project No.:	16-115
Description:	Developed Basin Calculations	Date:	9/19/2016
		Calc. By:	JMT

Developed Basin

Basin Wetland A

	Area SF	Area (Acres)	Impervious (%)	Impervious (Acres)	Lawn (Acres)	Forest (acres)	Pond (acres)
On-Site TOTAL	**19618.66**	**0.45**	**17%**	**0.08**	**0.37**	**0**	**0**
Buildings	0.00	0.00	0%	0.00	0.00	0	0
Pavment	3405.07	0.08	100%	0.08	0.00	0	0
Sidewalk	0.00	0.00	0%	0.00	0.00	0	0
Lawn/Landscape	16213.59	0.37	0%	0.00	0.37	0	0

Basin Calcs	LDC, Inc.	
	142201 NE 200th St. # 100 Woodinville, WA 98072	Tel: (425) 806-1869 Fax: (425) 482-2893

Project Name:	Mill Creek Commercial Building	Project No.:	16-115
Description:	Developed Basin Calculations	Date:	12/1/2016
		Calc. By:	JMT

Developed Basin

527 Basin

	Area SF	Area (Acres)	Impervious (%)	Impervious (Acres)	Lawn (Acres)	Forest (acres)	Pond (acres)
On-Site	248727.60	5.71	94%	5.36	0.35	0	0
Buildings	86849.98	1.99	100%	1.99	0.00	0	0
Pavment	146631.62	3.37	100%	3.37	0.00	0	0
Lawn/Landscape	15246.00	0.35	0%	0.00	0.35	0	0

Bypass

	Area SF	Area (Acres)	Impervious (%)	Impervious (Acres)	Lawn (Acres)	Forest (acres)	Pond (acres)
On-Site	3049.20	0.07	100%	0.07	0.00	0	0
Pavment	3049.20	0.07	100%	0.07	0.00	0	0

TOAL AREA MODELED	**251776.80**	**5.78**	**94%**	**5.43**	**0.35**	**0.00**	**0.00**

4.3 Flow Control System

Detention calculations were performed using the Western Washington Hydrology Model. The proposed detention facility consisting of CMP was designed in conformance with the 2005 DOE Stormwater Manual for Western Washington. The stormwater calculations and all supporting documents are included in Appendix 4-A and 4-B of this report.

Below are the design results and mitigated release rates for the Basin 1 detention facility:

Modeled Detention Facility (CMP)

Dimeter and Length:	7.0' x 2,580'
Effective Storage Depth:	6.0'
Riser Height:	6.0'
Riser Diameter:	12"
Number Orifices:	3
Orifice 1 Diameter: 1" Elevation: 0 ft	
Orifice 2 Diameter: 1.0625" Elevation: 4.35 ft	
Orifice 3 Diameter: 1.1875" Elevation: 5.35 ft	
Notch:	No
Maximum Storage El.:	442.20

Peak Flow Rates (Mitigated):

2-year	0.074 CFS
10-year	0.251 CFS
100-year	0.917 CFS

Total Area Tributary to Proposed Detention and Modular Wetland= 5.78 acres

4.4 Wetland Hydration

Wetland A

In the pre-developed condition there is approximately 1.71 acres of overland sheet flow into Wetland A. To determine the amount of flow in the developed condition necessary to maintain Wetland A hydration, the existing tributary area was modeled in its existing condition using StormShed hydrology software, SBUH methodology as outlined in the 2005 Ecology Stormwater Management Manual for the Puget Sound Basin (DOE Manual). From the Site Geotechnical Report, the site soil is Alderwood Gravity Sandy Loam (2 to 8 percent slope), and hydrologic soil group C.

The precipitation rates used for this analysis as follows (From DOE Manual):

2-year, 24-hour storm → 1.50 in.
10-year, 24-hour storm → 2.20 in.
100-year, 24-hour storm → 3.50 in.

The table below shows the information that was used to generate the existing flow rates into Wetland A. See Appendix 4-A for StormShed results.

Basin	**EXISTING CONDITIONS**	Total Area = 1.71 acres	
	GROUND COVER	AREA(acre)	CN
Wetland A	Open Spaces, Lawns, Parks (>75% grass)	1.543	86
Wetland A	Impervious	0.164	98
Wetland A	Pervious Composited CN (AMC 2)		87.15
Wetland A	Time of Concentration	Pervious	39.96 min.

The existing flow rates into Wetland A:

Peak Flow Rates:

2-year 0.021 CFS

10-year 0.065 CFS

100-year 0.259 CFS

Developed Conditions

The following results from StormShed show that the 0.45 acre developed condition acreage which will discharge to the wetland, will release flows which are within 5% of the 2-yr runoff in the existing condition.

The following information was used to generate the proposed flow rates. See Appendix 4-A for StormShed results.

DEVELOPED CONDITIONS	Total Area = 0.45 acre	
GROUND COVER	AREA(acre)	CN
Lawn, Landscaping (C soils)	0.37	86
Impervious	0.08	98
Time of Concentration	Assumed	5 min.

Proposed flow rates into Wetland A:

Peak Flow Rates:

2-year	0.022 CFS
10-year	0.038 CFS
100-year	0.097 CFS

APPENDIX 4-A

HYDROLOGIC MODELING
CALCULATIONS AND OUTPUT FROM STORMSHED

Appended on: 17:11:35 Tuesday, May 28, 2013

Existing Weltand A On-site Event Summary

Event	Peak Q (cfs)	Peak T (hrs)	Hyd Vol (acft)	Area (ac)	Method	Raintype
2 year	0.0213	17.17	0.0250	1.7070	SBUH	TYPE1A
10 year	0.0650	9.00	0.0710	1.7070	SBUH	TYPE1A
100 year	0.2588	8.50	0.1892	1.7070	SBUH	TYPE1A

Record Id: Existing Weltand A On-site

Design Method	SBUH	**Rainfall type**	TYPE1A
Hyd Intv	10.00 min	**Peaking Factor**	484.00
		Abstraction Coeff	0.20
Pervious Area (AMC 1)	1.71 ac	**DCIA**	0.00 ac
Pervious CN	75.44	**DC CN**	0.00
Pervious TC	39.96 min	**DC TC**	0.00 min

Pervious CN Calc		
Description	**SubArea**	**Sub cn**
Open spaces, lawns,parks (>75% grass)	1.54 ac	86.00
Impervious surfaces (pavements, roofs, etc)	0.16 ac	98.00
Pervious Composited CN (AMC 2)		87.15

Pervious TC Calc						
Type	**Description**	**Length**	**Slope**	**Coeff**	**Misc**	**TT**
Sheet		300.00 ft	2.33%	0.1500	1.50 in	32.42 min
Shallow		130.00 ft	4.62%	0.2400		7.54 min
Pervious TC						39.96 min

Appended on: 08:21:01 Wednesday, May 29, 2013

Developed Event Summary

Event	Peak Q (cfs)	Peak T (hrs)	Hyd Vol (acft)	Area (ac)	Method	Raintype
2 year	0.0218	8.00	0.0108	0.4520	SBUH	TYPE1A
10 year	0.0381	8.00	0.0237	0.4520	SBUH	TYPE1A
100 year	0.0966	8.00	0.0553	0.4520	SBUH	TYPE1A

Record Id: Developed

Design Method	SBUH	**Rainfall type**	TYPE1A
Hyd Intv	10.00 min	**Peaking Factor**	484.00
		Abstraction Coeff	0.20
Pervious Area (AMC 1)	0.37 ac	**DCIA**	0.08 ac
Pervious CN	72.07	**DC CN**	95.37
Pervious TC	39.96 min	**DC TC**	5.00 min

Pervious CN Calc		
Description	**SubArea**	**Sub cn**
Open spaces, lawns,parks (>75% grass)	0.37 ac	86.00
Pervious Composited CN (AMC 2)		86.00

Pervious TC Calc						
Type	**Description**	**Length**	**Slope**	**Coeff**	**Misc**	**TT**
Shallow		130.00 ft	4.62%	0.2400		7.54 min
Sheet		300.00 ft	2.33%	0.1500	1.50 in	32.42 min
Pervious TC						39.96 min

Directly Connected CN Calc		
Description	**SubArea**	**Sub cn**
Impervious surfaces (pavements, roofs, etc)	0.08 ac	98.00
DC Composited CN (AMC 2)		98.00

Directly Connected TC Calc						
Type	**Description**	**Length**	**Slope**	**Coeff**	**Misc**	**TT**
Fixed						5.00 min
Directly Connected TC						5.00min

APPENDIX 4-B

HYDROLOGIC MODELING
CALCULATIONS AND DETENTION PIPE SIZING OUTPUT FROM WWHM4

WWHM4
PROJECT REPORT

Project Name: 7 ft_2580_12 in riser
Site Name:
Site Address:
City :
Report Date: 9/14/2016
Gage : Everett
Data Start : 1948/10/01
Data End : 1997/09/30
Precip Scale: 1.00
Version Date: 2016/03/15

Low Flow Threshold for POC 1 : 50 Percent of the 2 Year

High Flow Threshold for POC 1: 50 year

PREDEVELOPED LAND USE

Name : Basin 527
Bypass: No

GroundWater: No

Pervious Land Use	acre
C, Forest, Mod	5.71
Pervious Total	5.71

Impervious Land Use	acre
Impervious Total	0
Basin Total	5.71

Element Flows To:

Surface	Interflow	Groundwater

Name : Bypass
Bypass: No

GroundWater: No

Pervious Land Use	acre
C, Forest, Flat	.07

Pervious Total **0.07**

Impervious Land Use	**acre**
Impervious Total	**0**
Basin Total	**0.07**

Element Flows To:

Surface	**Interflow**	**Groundwater**

MITIGATED LAND USE

Name : Basin 527
Bypass: No

GroundWater: No

Pervious Land Use	**acre**
C, Lawn, Flat	**.35**
Pervious Total	**0.35**

Impervious Land Use	**acre**
ROADS FLAT	**5.36**
Impervious Total	**5.36**
Basin Total	**5.71**

Element Flows To:

Surface	**Interflow**	**Groundwater**
Tank 1	Tank 1	

Name : Bypass
Bypass: No

GroundWater: No

Pervious Land Use	**acre**
Pervious Total	**0**

Impervious Land Use	**acre**
ROADS FLAT	**0.07**

Impervious Total **0.07**

Basin Total **0.07**

Element Flows To:

Surface	**Interflow**	**Groundwater**
Tank 1	Tank 1	

Name : Tank 1
Tank Name: Tank 1

Dimensions
Depth: 7 ft.
Tank Type : Circular
Diameter : 7 ft.
Length : 2580 ft.
Discharge Structure
Riser Height: 6 ft.
Riser Diameter: 12 in.
Orifice 1 Diameter: 1 in. **Elevation:** 0 ft.
Orifice 2 Diameter: 1.0625 in. **Elevation:** 4.35 ft.
Orifice 3 Diameter: 1.1875 in. **Elevation:** 5.35 ft.

Element Flows To:
Outlet 1 **Outlet 2**

Tank Hydraulic Table

Stage(feet)	Area(ac.)	Volume(ac-ft.)	Discharge(cfs)	Infilt(cfs)
0.0000	0.000	0.000	0.000	0.000
0.0778	0.086	0.004	0.007	0.000
0.1556	0.122	0.012	0.010	0.000
0.2333	0.148	0.023	0.013	0.000
0.3111	0.170	0.035	0.015	0.000
0.3889	0.189	0.049	0.016	0.000
0.4667	0.206	0.065	0.018	0.000
0.5444	0.222	0.081	0.020	0.000
0.6222	0.236	0.099	0.021	0.000
0.7000	0.248	0.118	0.022	0.000
0.7778	0.260	0.138	0.023	0.000
0.8556	0.271	0.159	0.025	0.000
0.9333	0.281	0.180	0.026	0.000
1.0111	0.291	0.203	0.027	0.000
1.0889	0.300	0.226	0.028	0.000
1.1667	0.309	0.249	0.029	0.000
1.2444	0.317	0.274	0.030	0.000
1.3222	0.324	0.299	0.031	0.000
1.4000	0.331	0.324	0.032	0.000
1.4778	0.338	0.350	0.033	0.000

1.5556	0.344	0.377	0.033	0.000
1.6333	0.350	0.404	0.034	0.000
1.7111	0.356	0.431	0.035	0.000
1.7889	0.361	0.459	0.036	0.000
1.8667	0.366	0.488	0.037	0.000
1.9444	0.371	0.516	0.037	0.000
2.0222	0.375	0.545	0.038	0.000
2.1000	0.380	0.575	0.039	0.000
2.1778	0.383	0.604	0.040	0.000
2.2556	0.387	0.634	0.040	0.000
2.3333	0.390	0.665	0.041	0.000
2.4111	0.394	0.695	0.042	0.000
2.4889	0.396	0.726	0.042	0.000
2.5667	0.399	0.757	0.043	0.000
2.6444	0.402	0.788	0.044	0.000
2.7222	0.404	0.819	0.044	0.000
2.8000	0.406	0.851	0.045	0.000
2.8778	0.408	0.883	0.046	0.000
2.9556	0.409	0.914	0.046	0.000
3.0333	0.410	0.946	0.047	0.000
3.1111	0.412	0.978	0.047	0.000
3.1889	0.413	1.010	0.048	0.000
3.2667	0.413	1.043	0.049	0.000
3.3444	0.414	1.075	0.049	0.000
3.4222	0.414	1.107	0.050	0.000
3.5000	0.414	1.139	0.050	0.000
3.5778	0.414	1.171	0.051	0.000
3.6556	0.414	1.204	0.051	0.000
3.7333	0.413	1.236	0.052	0.000
3.8111	0.413	1.268	0.053	0.000
3.8889	0.412	1.300	0.053	0.000
3.9667	0.410	1.332	0.054	0.000
4.0444	0.409	1.364	0.054	0.000
4.1222	0.408	1.396	0.055	0.000
4.2000	0.406	1.428	0.055	0.000
4.2778	0.404	1.459	0.056	0.000
4.3556	0.402	1.490	0.058	0.000
4.4333	0.399	1.522	0.066	0.000
4.5111	0.396	1.553	0.069	0.000
4.5889	0.394	1.583	0.073	0.000
4.6667	0.390	1.614	0.075	0.000
4.7444	0.387	1.644	0.078	0.000
4.8222	0.383	1.674	0.080	0.000
4.9000	0.380	1.704	0.082	0.000
4.9778	0.375	1.733	0.084	0.000
5.0556	0.371	1.762	0.086	0.000
5.1333	0.366	1.791	0.088	0.000
5.2111	0.361	1.819	0.090	0.000
5.2889	0.356	1.847	0.092	0.000
5.3667	0.350	1.875	0.098	0.000
5.4444	0.344	1.902	0.107	0.000
5.5222	0.338	1.928	0.112	0.000
5.6000	0.331	1.954	0.117	0.000
5.6778	0.324	1.980	0.121	0.000
5.7556	0.317	2.005	0.125	0.000
5.8333	0.309	2.029	0.129	0.000
5.9111	0.300	2.053	0.132	0.000

5.9889	0.291	2.076	0.136	0.000
6.0667	0.281	2.098	0.321	0.000
6.1444	0.271	2.120	0.715	0.000
6.2222	0.260	2.140	1.191	0.000
6.3000	0.248	2.160	1.657	0.000
6.3778	0.236	2.179	2.030	0.000
6.4556	0.222	2.197	2.267	0.000
6.5333	0.206	2.214	2.456	0.000
6.6111	0.189	2.229	2.621	0.000
6.6889	0.170	2.243	2.775	0.000
6.7667	0.148	2.256	2.921	0.000
6.8444	0.122	2.266	3.060	0.000
6.9222	0.086	2.274	3.193	0.000
7.0000	0.000	2.279	3.320	0.000
7.0778	0.000	0.000	3.442	0.000

ANALYSIS RESULTS

Predeveloped Landuse Totals for POC #1
Total Pervious Area:5.78
Total Impervious Area:0

Mitigated Landuse Totals for POC #1
Total Pervious Area:0.35
Total Impervious Area:5.43

Flow Frequency Return Periods for Predeveloped. POC #1

Return Period	Flow(cfs)
2 year	0.112462
5 year	0.171186
10 year	0.217205
25 year	0.284029
50 year	0.340479
100 year	0.402961

Flow Frequency Return Periods for Mitigated. POC #1

Return Period	Flow(cfs)
2 year	0.073822
5 year	0.157868
10 year	0.251056
25 year	0.434021
50 year	0.636782
100 year	0.917414

Annual Peaks for Predeveloped and Mitigated. POC #1

Year	Predeveloped	Mitigated
1949	0.040	0.051
1950	0.182	0.070
1951	0.088	0.053

1952	0.082	0.049
1953	0.106	0.049
1954	0.159	0.055
1955	0.210	0.254
1956	0.143	0.642
1957	0.204	0.056
1958	0.148	0.055
1959	0.117	0.054
1960	0.110	0.054
1961	0.106	0.109
1962	0.145	0.046
1963	0.221	0.054
1964	0.107	0.046
1965	0.108	0.056
1966	0.056	0.052
1967	0.149	0.055
1968	0.157	0.071
1969	0.071	0.053
1970	0.083	0.053
1971	0.126	0.303
1972	0.113	0.051
1973	0.081	0.082
1974	0.105	0.084
1975	0.084	0.048
1976	0.086	0.076
1977	0.065	0.049
1978	0.087	0.048
1979	0.275	0.047
1980	0.092	0.050
1981	0.104	0.047
1982	0.110	0.075
1983	0.102	0.060
1984	0.105	0.325
1985	0.155	0.244
1986	0.372	0.855
1987	0.154	0.347
1988	0.083	0.084
1989	0.128	0.048
1990	0.110	0.062
1991	0.118	0.081
1992	0.092	0.056
1993	0.055	0.045
1994	0.047	0.079
1995	0.107	0.089
1996	0.211	0.083
1997	0.465	1.630

Ranked Annual Peaks for Predeveloped and Mitigated. POC #1

Rank	Predeveloped	Mitigated
1	0.4649	1.6299
2	0.3724	0.8545
3	0.2750	0.6415
4	0.2213	0.3469
5	0.2110	0.3250
6	0.2098	0.3030
7	0.2039	0.2545

8	0.1815	0.2444
9	0.1588	0.1088
10	0.1566	0.0885
11	0.1549	0.0840
12	0.1543	0.0835
13	0.1490	0.0831
14	0.1482	0.0824
15	0.1449	0.0809
16	0.1427	0.0786
17	0.1277	0.0764
18	0.1261	0.0755
19	0.1179	0.0708
20	0.1173	0.0697
21	0.1126	0.0624
22	0.1103	0.0597
23	0.1097	0.0561
24	0.1097	0.0560
25	0.1082	0.0558
26	0.1070	0.0554
27	0.1065	0.0554
28	0.1064	0.0553
29	0.1055	0.0544
30	0.1052	0.0542
31	0.1046	0.0535
32	0.1044	0.0534
33	0.1016	0.0530
34	0.0922	0.0527
35	0.0921	0.0515
36	0.0877	0.0514
37	0.0875	0.0507
38	0.0863	0.0497
39	0.0843	0.0492
40	0.0832	0.0489
41	0.0830	0.0489
42	0.0822	0.0484
43	0.0809	0.0482
44	0.0714	0.0481
45	0.0651	0.0466
46	0.0563	0.0466
47	0.0550	0.0464
48	0.0468	0.0463
49	0.0403	0.0446

POC #1
The Facility PASSED

The Facility PASSED.

Flow(cfs)	Predev	Mit	Percentage	Pass/Fail
0.0562	4355	4003	91	Pass
0.0591	3894	3334	85	Pass
0.0620	3595	3160	87	Pass
0.0648	3201	2986	93	Pass
0.0677	2831	2779	98	Pass
0.0706	2513	2488	99	Pass
0.0735	2238	2180	97	Pass

0.0763	2000	1887	94	Pass
0.0792	1769	1587	89	Pass
0.0821	1551	1327	85	Pass
0.0849	1423	1174	82	Pass
0.0878	1266	999	78	Pass
0.0907	1144	810	70	Pass
0.0936	1030	659	63	Pass
0.0964	911	602	66	Pass
0.0993	810	567	70	Pass
0.1022	720	540	75	Pass
0.1050	634	513	80	Pass
0.1079	574	499	86	Pass
0.1108	516	464	89	Pass
0.1137	467	428	91	Pass
0.1165	428	391	91	Pass
0.1194	391	335	85	Pass
0.1223	360	293	81	Pass
0.1251	331	262	79	Pass
0.1280	303	223	73	Pass
0.1309	291	195	67	Pass
0.1338	270	142	52	Pass
0.1366	257	91	35	Pass
0.1395	238	88	36	Pass
0.1424	218	86	39	Pass
0.1452	198	85	42	Pass
0.1481	183	85	46	Pass
0.1510	169	85	50	Pass
0.1539	161	84	52	Pass
0.1567	150	81	54	Pass
0.1596	143	79	55	Pass
0.1625	139	76	54	Pass
0.1653	129	75	58	Pass
0.1682	126	74	58	Pass
0.1711	123	72	58	Pass
0.1739	118	71	60	Pass
0.1768	115	71	61	Pass
0.1797	112	71	63	Pass
0.1826	111	70	63	Pass
0.1854	108	70	64	Pass
0.1883	106	69	65	Pass
0.1912	105	69	65	Pass
0.1940	102	68	66	Pass
0.1969	101	67	66	Pass
0.1998	98	65	66	Pass
0.2027	92	62	67	Pass
0.2055	86	60	69	Pass
0.2084	85	59	69	Pass
0.2113	81	59	72	Pass
0.2141	78	59	75	Pass
0.2170	75	57	76	Pass
0.2199	74	56	75	Pass
0.2228	71	54	76	Pass
0.2256	70	53	75	Pass
0.2285	70	51	72	Pass
0.2314	67	50	74	Pass
0.2342	67	50	74	Pass
0.2371	65	49	75	Pass

0.2400	63	49	77	Pass
0.2429	62	47	75	Pass
0.2457	60	46	76	Pass
0.2486	60	45	75	Pass
0.2515	56	45	80	Pass
0.2543	56	45	80	Pass
0.2572	56	44	78	Pass
0.2601	53	42	79	Pass
0.2630	53	42	79	Pass
0.2658	52	42	80	Pass
0.2687	50	41	82	Pass
0.2716	50	40	80	Pass
0.2744	48	39	81	Pass
0.2773	45	38	84	Pass
0.2802	43	38	88	Pass
0.2831	41	37	90	Pass
0.2859	41	37	90	Pass
0.2888	39	37	94	Pass
0.2917	38	37	97	Pass
0.2945	38	36	94	Pass
0.2974	36	36	100	Pass
0.3003	34	35	102	Pass
0.3032	33	30	90	Pass
0.3060	33	30	90	Pass
0.3089	32	30	93	Pass
0.3118	32	28	87	Pass
0.3146	31	27	87	Pass
0.3175	30	26	86	Pass
0.3204	28	25	89	Pass
0.3233	28	25	89	Pass
0.3261	27	24	88	Pass
0.3290	26	24	92	Pass
0.3319	26	24	92	Pass
0.3347	25	24	96	Pass
0.3376	23	23	100	Pass
0.3405	21	23	109	Pass

Water Quality BMP Flow and Volume for POC #1
On-line facility volume: 0 **acre-feet**
On-line facility target flow: 0 **cfs.**
Adjusted for 15 min: 0 **cfs.**
Off-line facility target flow: 0 **cfs.**
Adjusted for 15 min: 0 **cfs.**

Perlnd and Implnd Changes

No changes have been made.

This program and accompanying documentation are provided 'as-is' without warranty of any kind. The entire risk regarding the performance and results of this program is assumed by End User. Clear Creek Solutions Inc. and the governmental licensee or sublicensees disclaim all warranties, either expressed or implied, including but not limited to implied warranties of program and accompanying documentation. In no event shall Clear Creek Solutions Inc. be liable for any damages whatsoever (including without limitation to damages for loss of business profits, loss of business information, business interruption, and the like) arising out of the use of, or inability to use this program even if Clear Creek Solutions Inc. or their authorized representatives have been advised of the possibility of such

damages. Software Copyright © by : Clear Creek Solutions, Inc. 2005-2016; All Rights Reserved.

4.5 Water Quality System

Water quality facilities have been designed to meet the general requirements outlined in the 2005 DOE Manual. The Western Washington Hydrology Model determined the treatment flow rates. Water quality calculations and supporting documents can be found in Appendix 4-C.

A biofiltration treatment facility referred to as a "modular wetland" will provide enhanced water quality treatment for developed area subject to treatment requirements. It will consist of a pretreatment chamber to remove sediment followed by a larger chamber containing biofiltration media. The modular wetland will provide treatment to stormwater after exiting the detention facility.

The water quality system has been designed/sized by Modular Wetlands to provide enhanced treatment per General Use Level Designation approval by the Department of Ecology (see Appendix 4-C for GULD certification and Modular wetland design sheet.

Modular wetland design/evaluation criteria proposed:

The modular wetland design values are as follows:

Treatment Flow: 0.075 cfs
Operating Head: 3.0 ft
Pretreatment Loading Rate: 0.88 gpm/sf
Wetland Media Loading Rate: 0.5 gpm/sf

APPENDIX 4-C

WATER QUALITY FACILITY DESIGN AND SUPPORTING DOCUMENTS

SITE SPECIFIC DATA			
PROJECT NAME		ARENA SPORTS	
PROJECT LOCATION		MILL CREEK, WA	
STRUCTURE ID			
TREATMENT REQUIRED			
VOLUME BASED (CF)		FLOW BASED (CFS)	
		0.0746	
TREATMENT HGL AVAILABLE (FT)			
PEAK BYPASS REQUIRED (CFS) – IF APPLICABLE			OFFLINE
PIPE DATA	I.E.	MATERIAL	DIAMETER
INLET PIPE 1	435.40	PVC	8"
INLET PIPE 2			
OUTLET PIPE	434.90	PVC	8"
	PRETREATMENT	BIOFILTRATION	DISCHARGE
RIM ELEVATION	439.00	439.00	439.00
SURFACE LOAD	PARKWAY	OPEN PLANTER	PARKWAY
FRAME & COVER	ø30"	N/A	ø24"
WETLANDMEDIA VOLUME (CY)			4.30
WETLANDMEDIA DELIVERY METHOD			PER CONTRACT
ORIFICE SIZE (DIA. INCHES)			ø1.89"
NOTES:			

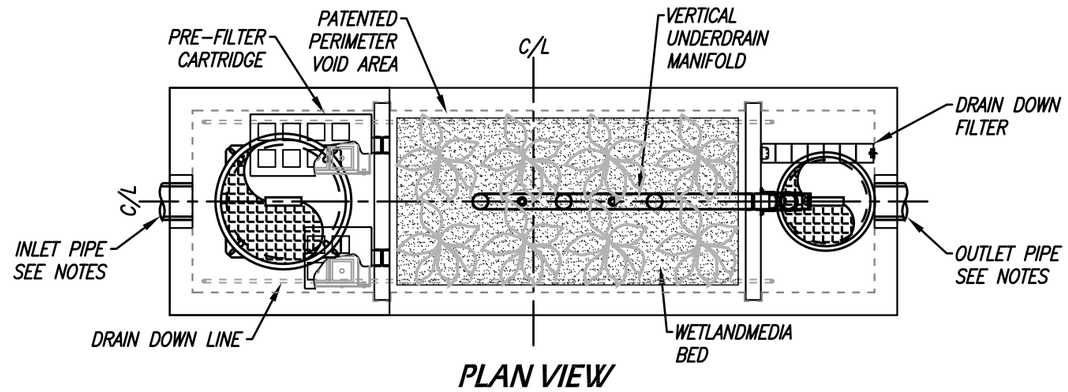

PLAN VIEW

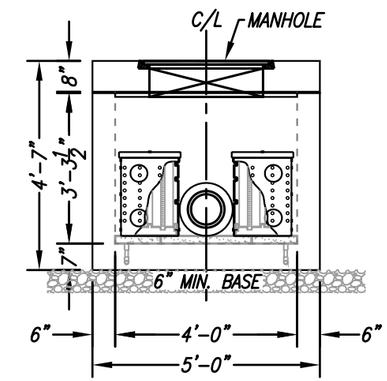

LEFT END VIEW

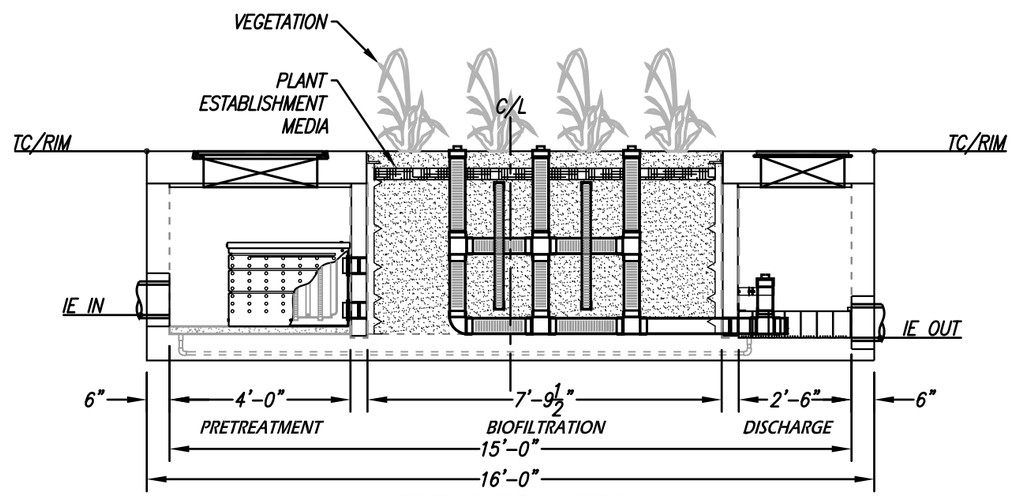

ELEVATION VIEW

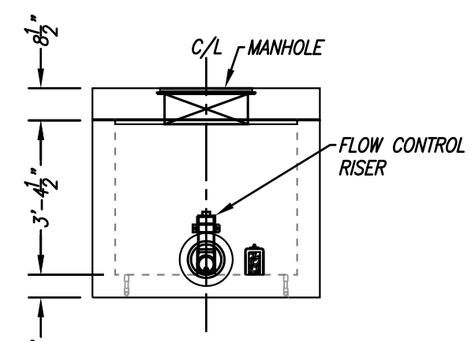

RIGHT END VIEW

INSTALLATION NOTES

1. CONTRACTOR TO PROVIDE ALL LABOR, EQUIPMENT, MATERIALS AND INCIDENTALS REQUIRED TO OFFLOAD AND INSTALL THE SYSTEM AND APPURTENANCES IN ACCORDANCE WITH THIS DRAWING AND THE MANUFACTURERS SPECIFICATIONS, UNLESS OTHERWISE STATED IN MANUFACTURERS CONTRACT.
2. UNIT MUST BE INSTALLED ON LEVEL BASE. MANUFACTURER RECOMMENDS A MINIMUM 6" LEVEL ROCK BASE UNLESS SPECIFIED BY THE PROJECT ENGINEER. CONTRACTOR IS RESPONSIBLE TO VERIFY PROJECT ENGINEERS RECOMMENDED BASE SPECIFICATIONS.
3. ALL PIPES MUST BE FLUSH WITH INSIDE SURFACE OF CONCRETE. (PIPES CANNOT INTRUDE BEYOND FLUSH). INVERT OF OUTFLOW PIPE MUST BE FLUSH WITH DISCHARGE CHAMBER FLOOR. ALL GAPS AROUND PIPES SHALL BE SEALED WATER TIGHT WITH A NON-SHRINK GROUT PER MANUFACTURERS STANDARD CONNECTION DETAIL AND SHALL MEET OR EXCEED REGIONAL PIPE CONNECTION STANDARDS.
4. CONTRACTOR TO SUPPLY AND INSTALL ALL EXTERNAL CONNECTING PIPES.
5. CONTRACTOR RESPONSIBLE FOR INSTALLATION OF ALL RISERS, MANHOLES, AND HATCHES. CONTRACTOR TO GROUT ALL MANHOLES AND HATCHES TO MATCH FINISHED SURFACE UNLESS SPECIFIED OTHERWISE.
6. DRIP OR SPRAY IRRIGATION REQUIRED ON ALL UNITS WITH VEGETATION.

GENERAL NOTES

1. MANUFACTURER TO PROVIDE ALL MATERIALS UNLESS OTHERWISE NOTED.
2. ALL DIMENSIONS, ELEVATIONS, SPECIFICATIONS AND CAPACITIES ARE SUBJECT TO CHANGE. FOR PROJECT SPECIFIC DRAWINGS DETAILING EXACT DIMENSIONS, WEIGHTS AND ACCESSORIES PLEASE CONTACT MANUFACTURER.

TREATMENT FLOW (CFS)	0.075
OPERATING HEAD (FT)	3.0
PRETREATMENT LOADING RATE (GPM/SF)	0.88
WETLAND MEDIA LOADING RATE (GPM/SF)	0.5

THE PRODUCT DESCRIBED MAY BE PROTECTED BY ONE OR MORE OF THE FOLLOWING US PATENTS: 7,425,262; 7,470,362; 7,674,378; 8,303,816; RELATED FOREIGN PATENTS OR OTHER PATENTS PENDING

PROPRIETARY AND CONFIDENTIAL:

THE INFORMATION CONTAINED IN THIS DRAWING IS THE SOLE PROPERTY OF MODULAR WETLANDS SYSTEMS. ANY REPRODUCTION IN PART OR AS A WHOLE WITHOUT THE WRITTEN PERMISSION OF MODULAR WETLANDS SYSTEMS IS PROHIBITED.

MODULAR WETLANDS
www.ModularWetlands.com | (855) 5MOD-WET

MWS-L-4-15-V
STORMWATER BIOFILTRATION SYSTEM STANDARD DETAIL

8/19/16 TOWNSEND

WASHINGTON STATE DEPARTMENT OF ECOLOGY

December 2015

GENERAL USE LEVEL DESIGNATION FOR BASIC, ENHANCED, AND PHOSPHORUS TREATMENT

For the

MWS-Linear Modular Wetland

Ecology's Decision:

Based on Modular Wetland Systems, Inc. application submissions, including the Technical Evaluation Report, dated April 1, 2014, Ecology hereby issues the following use level designation:

1. General use level designation (GULD) for the MWS-Linear Modular Wetland Stormwater Treatment System for Basic treatment
   - Sized at a hydraulic loading rate of 1 gallon per minute (gpm) per square foot (sq ft) of wetland cell surface area. For moderate pollutant loading rates (low to medium density residential basins), size the Prefilters at 3.0 gpm/sq ft of cartridge surface area. For high loading rates (commercial and industrial basins), size the Prefilters at 2.1 gpm/sq ft of cartridge surface area.
2. General use level designation (GULD) for the MWS-Linear Modular Wetland Stormwater Treatment System for Phosphorus treatment
   - Sized at a hydraulic loading rate of 1 gallon per minute (gpm) per square foot (sq ft) of wetland cell surface area. For moderate pollutant loading rates (low to medium density residential basins), size the Prefilters at 3.0 gpm/sq ft of cartridge surface area. For high loading rates (commercial and industrial basins), size the Prefilters at 2.1 gpm/sq ft of cartridge surface area.
3. General use level designation (GULD) for the MWS-Linear Modular Wetland Stormwater Treatment System for Enhanced treatment
   - Sized at a hydraulic loading rate of 1 gallon per minute (gpm) per square foot (sq ft) of wetland cell surface area. For moderate pollutant loading rates (low to medium density residential basins), size the Prefilters at 3.0 gpm/sq ft of cartridge surface area. For high loading rates (commercial and industrial basins), size the Prefilters at 2.1 gpm/sq ft of cartridge surface area.

4. Ecology approves the MWS - Linear Modular Wetland Stormwater Treatment System units for Basic, Phosphorus, and Enhanced treatment at the hydraulic loading rate listed above. Designers shall calculate the water quality design flow rates using the following procedures:

   - Western Washington: For treatment installed upstream of detention or retention, the water quality design flow rate is the peak 15-minute flow rate as calculated using the latest version of the Western Washington Hydrology Model or other Ecology-approved continuous runoff model.
   - Eastern Washington: For treatment installed upstream of detention or retention, the water quality design flow rate is the peak 15-minute flow rate as calculated using one of the three methods described in Chapter 2.2.5 of the Stormwater Management Manual for Eastern Washington (SWMMEW) or local manual.
   - Entire State: For treatment installed downstream of detention, the water quality design flow rate is the full 2-year release rate of the detention facility.

5. These use level designations have no expiration date but may be revoked or amended by Ecology, and are subject to the conditions specified below.

Ecology's Conditions of Use:

Applicants shall comply with the following conditions:

1. Design, assemble, install, operate, and maintain the MWS – Linear Modular Wetland Stormwater Treatment System units, in accordance with Modular Wetland Systems, Inc. applicable manuals and documents and the Ecology Decision.
2. Each site plan must undergo Modular Wetland Systems, Inc. review and approval before site installation. This ensures that site grading and slope are appropriate for use of a MWS – Linear Modular Wetland Stormwater Treatment System unit.
3. MWS – Linear Modular Wetland Stormwater Treatment System media shall conform to the specifications submitted to, and approved by, Ecology.
4. The applicant tested the MWS – Linear Modular Wetland Stormwater Treatment System with an external bypass weir. This weir limited the depth of water flowing through the media, and therefore the active treatment area, to below the root zone of the plants. This GULD applies to MWS – Linear Modular Wetland Stormwater Treatment Systems whether plants are included in the final product or not.
5. Maintenance: The required maintenance interval for stormwater treatment devices is often dependent upon the degree of pollutant loading from a particular drainage basin. Therefore, Ecology does not endorse or recommend a "one size fits all" maintenance cycle for a particular model/size of manufactured filter treatment device.

   - Typically, Modular Wetland Systems, Inc. designs MWS - Linear Modular Wetland systems for a target prefilter media life of 6 to 12 months.
   - Indications of the need for maintenance include effluent flow decreasing to below the design flow rate or decrease in treatment below required levels.
   - Owners/operators must inspect MWS - Linear Modular Wetland systems for a minimum of twelve months from the start of post-construction operation to determine site-specific

maintenance schedules and requirements. You must conduct inspections monthly during the wet season, and every other month during the dry season. (According to the SWMMWW, the wet season in western Washington is October 1 to April 30. According to SWMMEW, the wet season in eastern Washington is October 1 to June 30). After the first year of operation, owners/operators must conduct inspections based on the findings during the first year of inspections.

- Conduct inspections by qualified personnel, follow manufacturer's guidelines, and use methods capable of determining either a decrease in treated effluent flowrate and/or a decrease in pollutant removal ability.
- When inspections are performed, the following findings typically serve as maintenance triggers:
  - Standing water remains in the vault between rain events, or
  - Bypass occurs during storms smaller than the design storm.
  - If excessive floatables (trash and debris) are present (but no standing water or excessive sedimentation), perform a minor maintenance consisting of gross solids removal, not prefilter media replacement.
  - Additional data collection will be used to create a correlation between pretreatment chamber sediment depth and pre-filter clogging (see *Issues to be Addressed by the Company* section below)

6. Discharges from the MWS - Linear Modular Wetland Stormwater Treatment System units shall not cause or contribute to water quality standards violations in receiving waters.

Applicant:	Modular Wetland Systems, Inc.
Applicant's Address:	*PO. Box 869* *Oceanside, CA 92054*

Application Documents:

- *Original Application for Conditional Use Level Designation*, Modular Wetland System, Linear Stormwater Filtration System Modular Wetland Systems, Inc., January 2011
- *Quality Assurance Project Plan*: Modular Wetland system – Linear Treatment System performance Monitoring Project, draft, January 2011.
- *Revised Application for Conditional Use Level Designation*, Modular Wetland System, Linear Stormwater Filtration System Modular Wetland Systems, Inc., May 2011
- *Memorandum: Modular Wetland System-Linear GULD Application Supplementary Data, April 2014*
- *Technical Evaluation Report: Modular Wetland System Stormwater Treatment System Performance Monitoring, April 2014.*

Applicant's Use Level Request:

General use level designation as a Basic, Enhanced, and Phosphorus treatment device in accordance with Ecology's Guidance for Evaluating Emerging Stormwater Treatment Technologies Technology Assessment Protocol – Ecology (TAPE) January 2011 Revision.

Applicant's Performance Claims:

- The MWS – Linear Modular wetland is capable of removing a minimum of 80-percent of TSS from stormwater with influent concentrations between 100 and 200 mg/l.
- The MWS – Linear Modular wetland is capable of removing a minimum of 50-percent of Total Phosphorus from stormwater with influent concentrations between 0.1 and 0.5 mg/l.
- The MWS – Linear Modular wetland is capable of removing a minimum of 30-percent of dissolved Copper from stormwater with influent concentrations between 0.005 and 0.020 mg/l.
- The MWS – Linear Modular wetland is capable of removing a minimum of 60-percent of dissolved Zinc from stormwater with influent concentrations between 0.02 and 0.30 mg/l.

Ecology Recommendations:

- Modular Wetland Systems, Inc. has shown Ecology, through laboratory and field-testing, that the MWS - Linear Modular Wetland Stormwater Treatment System filter system is capable of attaining Ecology's Basic, Total phosphorus, and Enhanced treatment goals.

Findings of Fact:

<u>Laboratory Testing</u>

The MWS-Linear Modular wetland has the:

- Capability to remove 99 percent of total suspended solids (using Sil-Co-Sil 106) in a quarter-scale model with influent concentrations of 270 mg/L.
- Capability to remove 91 percent of total suspended solids (using Sil-Co-Sil 106) in laboratory conditions with influent concentrations of 84.6 mg/L at a flow rate of 3.0 gpm per square foot of media.
- Capability to remove 93 percent of dissolved Copper in a quarter-scale model with influent concentrations of 0.757 mg/L.
- Capability to remove 79 percent of dissolved Copper in laboratory conditions with influent concentrations of 0.567 mg/L at a flow rate of 3.0 gpm per square foot of media.
- Capability to remove 80.5-percent of dissolved Zinc in a quarter-scale model with influent concentrations of 0.95 mg/L at a flow rate of 3.0 gpm per square foot of media.
- Capability to remove 78-percent of dissolved Zinc in laboratory conditions with influent concentrations of 0.75 mg/L at a flow rate of 3.0 gpm per square foot of media.

Field Testing

- Modular Wetland Systems, Inc. conducted monitoring of an MWS-Linear (Model # MWS-L-4-13) from April 2012 through May 2013, at a transportation maintenance facility in Portland, Oregon. The manufacturer collected flow-weighted composite samples of the system's influent and effluent during 28 separate storm events. The system treated approximately 75 percent of the runoff from 53.5 inches of rainfall during the monitoring period. The applicant sized the system at 1 gpm/sq ft. (wetland media) and 3gpm/sq ft. (prefilter).
- Influent TSS concentrations for qualifying sampled storm events ranged from 20 to 339 mg/L. Average TSS removal for influent concentrations greater than 100 mg/L (n=7) averaged 85 percent. For influent concentrations in the range of 20-100 mg/L (n=18), the upper 95 percent confidence interval about the mean effluent concentration was 12.8 mg/L.
- Total phosphorus removal for 17 events with influent TP concentrations in the range of 0.1 to 0.5 mg/L averaged 65 percent. A bootstrap estimate of the lower 95 percent confidence limit (LCL95) of the mean total phosphorus reduction was 58 percent.
- The lower 95 percent confidence limit of the mean percent removal was 60.5 percent for dissolved zinc for influent concentrations in the range of 0.02 to 0.3 mg/L (n=11). The lower 95 percent confidence limit of the mean percent removal was 32.5 percent for dissolved copper for influent concentrations in the range of 0.005 to 0.02 mg/L (n=14) at flow rates up to 28 gpm (design flow rate 41 gpm). Laboratory test data augmented the data set, showing dissolved copper removal at the design flow rate of 41 gpm (93 percent reduction in influent dissolved copper of 0.757 mg/L).

Issues to be addressed by the Company:

1. Modular Wetland Systems, Inc. should collect maintenance and inspection data for the first year on all installations in the Northwest in order to assess standard maintenance requirements for various land uses in the region. Modular Wetland Systems, Inc. should use these data to establish required maintenance cycles.
2. Modular Wetland Systems, Inc. should collect pre-treatment chamber sediment depth data for the first year of operation for all installations in the Northwest. Modular Wetland Systems, Inc. will use these data to create a correlation between sediment depth and pre-filter clogging.

Technology Description:
Download at http://www.modularwetlands.com/

Contact Information:

Applicant: Greg Kent
Modular Wetland Systems, Inc.
P.O. Box 869
Oceanside, CA 92054
gkent@biocleanenvironmental.net

Applicant website: http://www.modularwetlands.com/

Ecology web link: http://www.ecy.wa.gov/programs/wg/stormwater/newtech/index.html

Ecology: Douglas C. Howie, P.E.
Department of Ecology
Water Quality Program
(360) 407-6444
douglas.howie@ecy.wa.gov

Revision History

Date	**Revision**
June 2011	Original use-level-designation document
September 2012	Revised dates for TER and expiration
January 2013	Modified Design Storm Description, added Revision Table, added maintenance discussion, modified format in accordance with Ecology standard
December 2013	Updated name of Applicant
April 2014	Approved GULD designation for Basic, Phosphorus, and Enhanced treatment
December 2015	Updated GULD to document the acceptance of MWS-Linear Modular Wetland installations with or without the inclusion of plants.

5.0 CONVEYANCE SYSTEM ANALYSIS AND DESIGN

Conveyance Analysis

The conveyance analysis will be completed with the final drainage report.

6.0 SPECIAL REPORTS AND STUDIES

- Altmann Oliver Associates, LLC. 2005. *Wetland Delineation and Buffer Enhancement Report, Cedar Park Assembly of God, Mill Creek, Washington*. May 13, 2005.

- Talasaea Consultants, Inc. 2012. *Review of John Altmann's 2004 Rating of an Off-property Wetland for the Cedar Park Church.* October 19, 2012.

- Talasaea Consultants, Inc. 2016. *Evaluation of Wetland Rating, Cedar Park Mill Creek Commercial Building, Mill Creek, Washington*. June 24, 2016.

- Robinson Noble. 2016. *Geotechnical Engineering Report, 13518 Bothell-Everett Highway*. June 30, 2016

7.0 OPERATIONS AND MAINTENANCE MANUAL

An Operations and Maintenance Manual based on guidance provided in the 2005 Ecology Stormwater Manual (unless otherwise noted) is included in Appendix 7-A.

APPENDIX 7-A

OPERATIONS AND MAINTENANCE MANUAL

No. 3 – Closed Detention Systems (Tanks/Vaults)

Maintenance Component	Defect	Conditions When Maintenance is Needed	Results Expected When Maintenance is Performed
Storage Area	Plugged Air Vents	One-half of the cross section of a vent is blocked at any point or the vent is damaged.	Vents open and functioning.
	Debris and Sediment	Accumulated sediment depth exceeds 10% of the diameter of the storage area for 1/2 length of storage vault or any point depth exceeds 15% of diameter. (Example: 72-inch storage tank would require cleaning when sediment reaches depth of 7 inches for more than 1/2 length of tank.)	All sediment and debris removed from storage area.
	Joints Between Tank/Pipe Section	Any openings or voids allowing material to be transported into facility. (Will require engineering analysis to determine structural stability).	All joint between tank/pipe sections are sealed.
	Tank Pipe Bent Out of Shape	Any part of tank/pipe is bent out of shape more than 10% of its design shape. (Review required by engineer to determine structural stability).	Tank/pipe repaired or replaced to design.
	Vault Structure Includes Cracks in Wall, Bottom, Damage to Frame and/or Top Slab	Cracks wider than 1/2-inch and any evidence of soil particles entering the structure through the cracks, or maintenance/inspection personnel determines that the vault is not structurally sound. Cracks wider than 1/2-inch at the joint of any inlet/outlet pipe or any evidence of soil particles entering the vault through the walls.	Vault replaced or repaired to design specifications and is structurally sound. No cracks more than 1/4-inch wide at the joint of the inlet/outlet pipe.
Manhole	Cover Not in Place	Cover is missing or only partially in place. Any open manhole requires maintenance.	Manhole is closed.
	Locking Mechanism Not Working	Mechanism cannot be opened by one maintenance person with proper tools. Bolts into frame have less than 1/2 inch of thread (may not apply to self-locking lids).	Mechanism opens with proper tools.
	Cover Difficult to Remove	One maintenance person cannot remove lid after applying normal lifting pressure. Intent is to keep cover from sealing off access to maintenance.	Cover can be removed and reinstalled by one maintenance person.
	Ladder Rungs Unsafe	Ladder is unsafe due to missing rungs, misalignment, not securely attached to structure wall, rust, or cracks.	Ladder meets design standards. Allows maintenance person safe access.
Catch Basins	See “Catch Basins” (No. 5)	See “Catch Basins” (No. 5).	See “Catch Basins” (No. 5).

No. 4 – Control Structure/Flow Restrictor

Maintenance Component	Defect	Condition When Maintenance is Needed	Results Expected When Maintenance is Performed
General	Trash and Debris (Includes Sediment)	Material exceeds 25% of sump depth or 1 foot below orifice plate.	Control structure orifice is not blocked. All trash and debris removed.
	Structural Damage	Structure is not securely attached to manhole wall.	Structure securely attached to wall and outlet pipe.
		Structure is not in upright position (allow up to 10% from plumb).	Structure in correct position.
		Connections to outlet pipe are not watertight and show signs of rust.	Connections to outlet pipe are water tight; structure repaired or replaced and works as designed.
		Any holes--other than designed holes--in the structure.	Structure has no holes other than designed holes.
Cleanout Gate	Damaged or Missing	Cleanout gate is not watertight or is missing.	Gate is watertight and works as designed.
		Gate cannot be moved up and down by one maintenance person.	Gate moves up and down easily and is watertight.
		Chain/rod leading to gate is missing or damaged.	Chain is in place and works as designed.
		Gate is rusted over 50% of its surface area.	Gate is repaired or replaced to meet design standards.
Orifice Plate	Damaged or Missing	Control device is not working properly due to missing, out of place, or bent orifice plate.	Plate is in place and works as designed.
	Obstructions	Any trash, debris, sediment, or vegetation blocking the plate.	Plate is free of all obstructions and works as designed.
Overflow Pipe	Obstructions	Any trash or debris blocking (or having the potential of blocking) the overflow pipe.	Pipe is free of all obstructions and works as designed.
Manhole	See “Closed Detention Systems” (No. 3).	See “Closed Detention Systems” (No. 3).	See “Closed Detention Systems” (No. 3).
Catch Basin	See “Catch Basins” (No. 5).	See “Catch Basins” (No. 5).	See “Catch Basins” (No. 5).

No. 5 – Catch Basins

Maintenance Component	Defect	Conditions When Maintenance is Needed	Results Expected When Maintenance is Performed
General	Trash & Debris	Trash or debris which is located immediately in front of the catch basin opening or is blocking inletting capacity of the basin by more than 10%.	No Trash or debris located immediately in front of catch basin or on grate opening.
		Trash or debris (in the basin) that exceeds 60 percent of the sump depth as measured from the bottom of basin to invert of the lowest pipe into or out of the basin, but in no case less than a minimum of six inches clearance from the debris surface to the invert of the lowest pipe.	No trash or debris in the catch basin.
		Trash or debris in any inlet or outlet pipe blocking more than 1/3 of its height.	Inlet and outlet pipes free of trash or debris.
		Dead animals or vegetation that could generate odors that could cause complaints or dangerous gases (e.g., methane).	No dead animals or vegetation present within the catch basin.
	Sediment	Sediment (in the basin) that exceeds 60 percent of the sump depth as measured from the bottom of basin to invert of the lowest pipe into or out of the basin, but in no case less than a minimum of 6 inches clearance from the sediment surface to the invert of the lowest pipe.	No sediment in the catch basin
	Structure Damage to Frame and/or Top Slab	Top slab has holes larger than 2 square inches or cracks wider than 1/4 inch (Intent is to make sure no material is running into basin).	Top slab is free of holes and cracks.
		Frame not sitting flush on top slab, i.e., separation of more than 3/4 inch of the frame from the top slab. Frame not securely attached	Frame is sitting flush on the riser rings or top slab and firmly attached.
	Fractures or Cracks in Basin Walls/ Bottom	Maintenance person judges that structure is unsound.	Basin replaced or repaired to design standards.
		Grout fillet has separated or cracked wider than 1/2 inch and longer than 1 foot at the joint of any inlet/outlet pipe or any evidence of soil particles entering catch basin through cracks.	Pipe is regrouted and secure at basin wall.
	Settlement/ Misalignment	If failure of basin has created a safety, function, or design problem.	Basin replaced or repaired to design standards.
	Vegetation	Vegetation growing across and blocking more than 10% of the basin opening.	No vegetation blocking opening to basin.
		Vegetation growing in inlet/outlet pipe joints that is more than six inches tall and less than six inches apart.	No vegetation or root growth present.

No. 5 – Catch Basins (continued)

Maintenance Component	Defect	Conditions When Maintenance is Needed	Results Expected When Maintenance is Performed
	Contamination and Pollution	See "Detention Ponds" (No. 1).	No pollution present.
Catch Basin Cover	Cover Not in Place	Cover is missing or only partially in place. Any open catch basin requires maintenance.	Catch basin cover is closed
	Locking Mechanism Not Working	Mechanism cannot be opened by one maintenance person with proper tools. Bolts into frame have less than 1/2 inch of thread.	Mechanism opens with proper tools.
	Cover Difficult to Remove	One maintenance person cannot remove lid after applying normal lifting pressure. (Intent is keep cover from sealing off access to maintenance.)	Cover can be removed by one maintenance person.
Ladder	Ladder Rungs Unsafe	Ladder is unsafe due to missing rungs, not securely attached to basin wall, misalignment, rust, cracks, or sharp edges.	Ladder meets design standards and allows maintenance person safe access.
Metal Grates (If Applicable)	Grate opening Unsafe	Grate with opening wider than 7/8 inch.	Grate opening meets design standards.
	Trash and Debris	Trash and debris that is blocking more than 20% of grate surface inletting capacity.	Grate free of trash and debris.
	Damaged or Missing.	Grate missing or broken member(s) of the grate.	Grate is in place and meets design standards.

No. 21 - Conveyance Storm Pipes (Source: 2016 Snohomish County Drainage Manual)

Drainage System	Potenti al	Conditions When Maintenance Is Needed	Results Expected When Maintenance Is
General	Obstructions, Including Roots	Root enters or deforms pipe, reducing flow.	Use mechanical methods to remove root if possible. Use of chemicals to remove roots shall be done in accordance with
	Pipe Dented or Broken	Inlet/outlet piping damaged or broken and in need of repair.	Pipe repaired and/or replaced.
	Pipe Rusted or Deteriorated	Any part of the piping that is crushed or deformed more than 20% or any other failure to the piping.	Pipe repaired and/or replaced.
	Sediment & Debris	Sediment depth is greater than 20% of pipe diameter.	Install upstream debris traps (where applicable) then clean pipe and
	Debris barrier or Trash Rack Missing	A debris barrier or trash rack that had been installed on the end of a drainage pipe is missing	Debris barrier or trash rack is replaced.
	Joint/Se al Problem	The joint between pipe sections is separated and/or the seal at the joint is cracked or broken.	The joint and/or seal is repaired so that joint is not separated and is