A PORTION OF THE NE 1/4 OF SECTION 31, TWP. 28 N., RGE. 5 E., W.M., CITY OF MILL CREEK, SNOHOMISH COUNTY, WASHINGTON

ARENA SPORTS
PRELIMINARY PLANS

LEGEND AND ABBREVIATIONS

EXISTING SYMBOLS

SYMBOL	DESCRIPTION
	EXISTING REBAR W/CAP, AS NOTED
	FOUND CONCRETE MONUMENT AS NOTED
	STORM DRAIN MANHOLE
	INVERT/CULVERT
	CATCH BASIN
	WATER VALVE
	FIRE HYDRANT
	WATER METER
	LUMINAIRE
	SANITARY SEWER MANHOLE
	SANITARY SEWER CLEAN OUT
	SIGN POST
	UTILITY/POWER POLE
	GUY ANCHOR
	GAS VALVE
	POWER VAULT
	WATER VAULT
	CATV/TELEPHONE RISER
	CONIFEROUS TREE

ABBREVIATIONS

CB	CATCH BASIN
℄	CENTERLINE
CMP	CORRUGATED METAL PIPE
CP	CONCRETE PIPE
EL	ELEVATION
EXIST.	EXISTING
℄	FLOWLINE
IE	INVERT ELEVATION
LCPE	LINED CORRUGATED POLYETHYLENE PIPE
ℙ	PROPERTY LINE
PP	POWER POLE
PVC	POLYVINYL CHLORIDE PIPE
R/W	RIGHT-OF-WAY
STA	STATION
SD	STORM DRAIN
SS	SANITARY SEWER
SSMH	SANITARY SEWER MANHOLE
SWPE	SOLID WALL POLYETHYLENE PIPE
TYP	TYPICAL
TBR	TO BE REMOVED

PROPOSED STORM SYMBOLS

SYMBOL	DESCRIPTION
	SD CAP
	TYPE 1 CATCH BASIN, GRATED LID
	TYPE 1 CATCH BASIN, SOLID LID
	TYPE 2 CATCH BASIN, GRATED LID
	TYPE 2 CATCH BASIN, SOLID LID
	BEEHIVE MANHOLE COVER
	SQUARE YARD DRAIN
	ROUND YARD DRAIN
	STORM CLEAN OUT
	STORM PIPE

PROPOSED SEWER SYMBOLS

SYMBOL	DESCRIPTION
	SEWER CAP
	SEWER CLEANOUT
	SEWER MANHOLE
	SEWER PIPE

PROPOSED WATER SYMBOLS

SYMBOL	DESCRIPTION
	WATER CAP
	CONCRETE BLOCKING
	BUTTERFLY VALVE
	11° BEND
	45° BEND
	90° BEND
	22° BEND
	VALVE
	HYDRANT ASSEMBLY
	BLOW-OFF VALVE
	REDUCER
	AIR-VAC ASSEMBLY
	WATER METER
	WATER PIPE

PROPOSED SURVEY SYMBOLS

SYMBOL	DESCRIPTION
	SURVEY MONUMENT IN PROPOSED ROAD

PROJECT INFORMATION

SITE ADDRESS:	13518 BOTHELL-EVERETT HWY, BOTHELL, WA 98012
TAX PARCELS:	28053100104000, 28053100103200, 28053100103400
SITE AREA:	293,167 SF 6.73 AC
WATER:	SILVER LAKE WATER AND SEWER DISTRICT
SEWER:	SILVER LAKE WATER AND SEWER DISTRICT
POWER:	SNOHOMISH COUNTY PUD
TELEPHONE:	VERIZON
GAS:	PUGET SOUND ENERGY
CABLE:	COMCAST

CONTACT LIST

OWNER/APPLICANT:
CSA REAL ESTATE, LLC
9040 WILLOWS ROAD, SUITE 102
REDMOND, WA 98052
CONTACT: DON CROWE
PHONE: (206) 849-6285
EMAIL: dcrowe@arenasports.net

GEOTECH:
ROBINSON NOBLE
17625 130TH AVE NE, SUITE 102
WOODENVILLE, WA 98072
CONTACT: RICK B. POWELL, PE
PHONE: (425) 488-0599

SURVEYOR:
LDC, INC.
20210 142ND AVE NE
WOODINVILLE WASHINGTON 98072
CONTACT: MICHAEL MERRITT, PLS
PHONE: (425) 806-1869
FAX: (425) 482-2893
EMAIL: michaelm@ldccorp.com

ENGINEER:
LDC, INC.
20210 142ND AVE NE
WOODINVILLE, WASHINGTON 98072
CONTACT: MARK VILLWOCK, P.E.
PHONE: (425) 806-1869
FAX: (425) 482-2893
EMAIL: MVILLWOCK@LDCCORP.COM

SURVEYOR:
CORNERSTONE ENGINEERING, INC.
116928 WOODINVILLE-REDMOND RD
SUITE 210
WOODINVILLE, WASHINGTION 98072
CONTACT: JEFF MOOG, PLS
PHONE: (425) 487-1732
FAX: (425) 487-1734
EMAIL: cei@cornerstone-engr.com

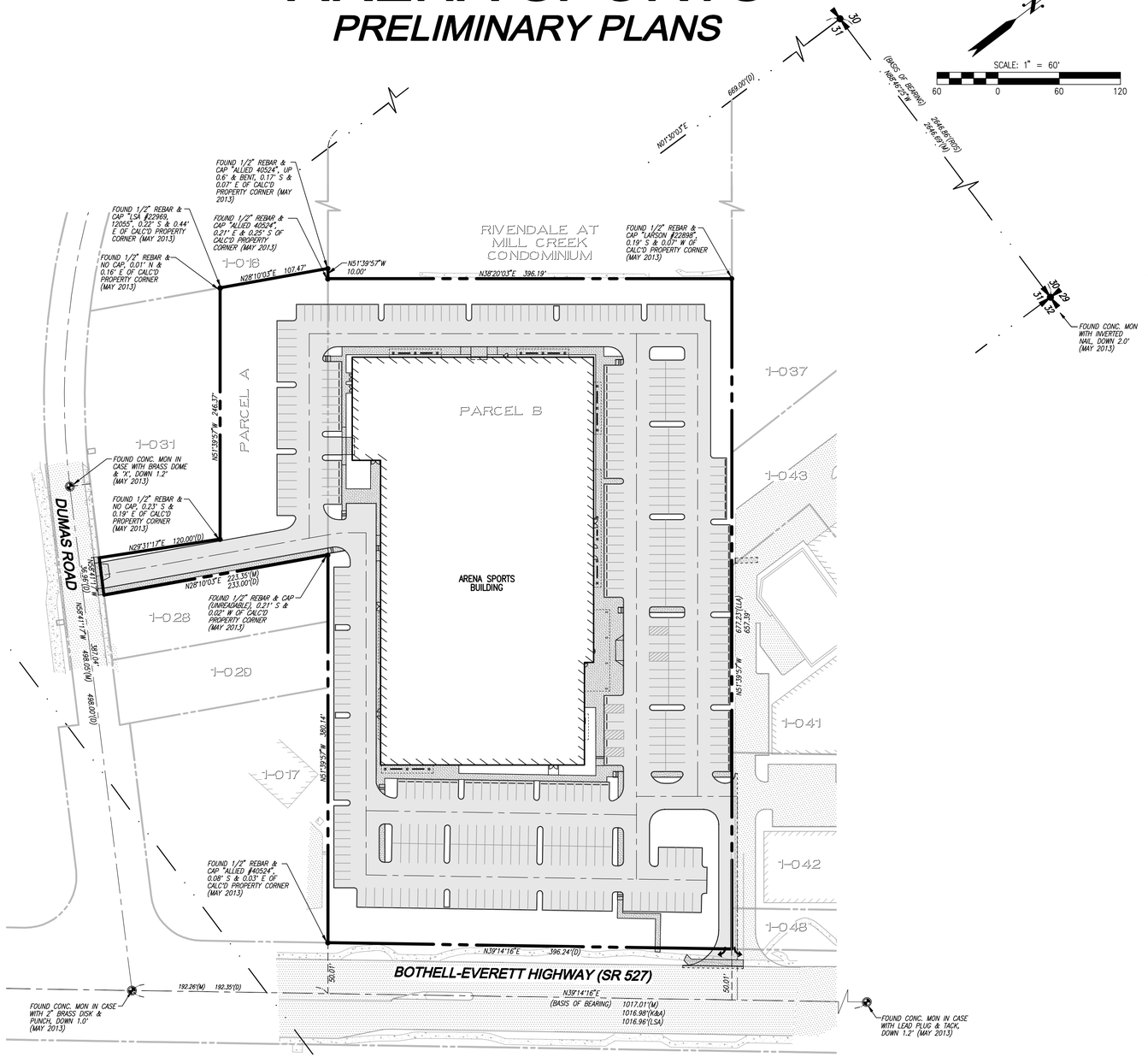

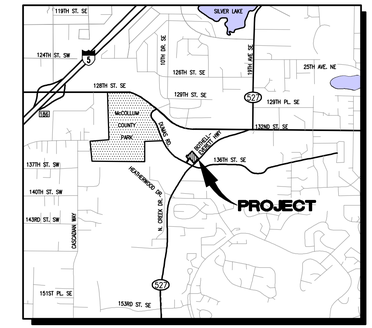

VICINITY MAP
NOT TO SCALE

SURVEY INFORMATION

LEGAL DESCRIPTION

PARCEL A
THAT PORTION OF THE NORTHEAST QUARTER OF SECTION 31, TOWNSHIP 28 NORTH, RANGE 5 EAST W.M., RECORDS OF SNOHOMISH COUNTY, WASHINGTON, DESCRIBED AS FOLLOWS:

BEGINNING 669.00 FEET SOUTH OF THE NORTHWEST CORNER OF SAID SUBDIVISION; THENCE SOUTH 53°10'00" EAST 300.00 FEET TO THE TRUE POINT OF BEGINNING; THENCE CONTINUING SOUTH 53°10'00" EAST 281.00 FEET; THENCE SOUTH 26°40'00" WEST 233.00 FEET TO THE WESTERLY LINE OF DUMAS ROAD; THENCE NORTH 63°20'00" WEST ALONG SAID WESTERLY LINE TO A POINT SOUTH 26°40'00" WEST FROM THE TRUE POINT OF BEGINNING; THENCE NORTH 26°40'00" EAST TO THE TRUE POINT OF BEGINNING;

EXCEPT THAT PORTION THEREOF, DESCRIBED AS FOLLOWS:

COMMENCING AT THE NORTH QUARTER OF SAID SECTION 31; THENCE SOUTH ALONG THE SECTION CENTERLINE, 669.00 FEET; THENCE SOUTH 53°10'00" EAST FOR 1011.00 FEET TO THE CENTERLINE OF EVERETT-BOTHELL WAY HIGHWAY (SR 527); THENCE SOUTH 37°44'15" WEST ALONG SAID CENTERLINE, 192.35 FEET TO THE CENTERLINE INTERSECTION WITH DUMAS ROAD; THENCE NORTH 60°10'54" WEST ALONG SAID CENTERLINE 498.00 FEET; THENCE NORTH 29°39'15" EAST 20.00 FEET TO THE NORTHERLY RIGHT OF WAY LINE OF SAID DUMAS ROAD AND THE TRUE POINT OF BEGINNING; THENCE SOUTH 60°10'45" EAST ALONG SAID NORTHERLY LINE, 72.91 FEET; THENCE NORTH 28°01'14" EAST 120.00 FEET; THENCE NORTH 53°10'00" WEST TO AN INTERSECTION WITH THE FOLLOWING DESCRIBED LINE;

BEGINNING AT THE NORTHWEST CORNER OF THE NORTHEAST QUARTER OF SAID SECTION 31; THENCE SOUTH ALONG THE WEST LINE THEREOF, 669.00 FEET; THENCE SOUTH 53°10'00" EAST 300.00 FEET TO THE TRUE POINT OF BEGINNING OF SAID LINE DESCRIPTION; THENCE SOUTH 26°40'00" WEST 225.00 FEET, MORE OR LESS, TO THE NORTHERLY LINE OF DUMAS ROAD AND THE TERMINUS OF SAID DESCRIBED LINE; THENCE SOUTH 26°40'00" WEST TO THE NORTHERLY LINE OF DUMAS ROAD; THENCE SOUTHEASTERLY ALONG SAID NORTHERLY LINE TO THE TRUE POINT OF BEGINNING.

SITUATE IN THE COUNTY OF SNOHOMISH, STATE OF WASHINGTON.

PARCEL B
PARCEL B OF CITY OF MILL CREEK LOT LINE ADJUSTMENT NO. 96-42 RECORDED UNDER AUDITOR'S FILE NUMBER 9609235001, BEING MORE PARTICULARLY DESCRIBED AS FOLLOWS:

THAT PORTION OF THE NORTHEAST QUARTER OF SECTION 31, TOWNSHIP 28 NORTH, RANGE 5 EAST, W.M., DESCRIBED AS FOLLOWS:

COMMENCING AT THE NORTH QUARTER CORNER OF SAID SECTION 31; THENCE SOUTH 00°12'33" EAST ALONG THE WEST LINE OF SAID NORTHEAST QUARTER, 669.00 FEET TO THE SOUTHWEST CORNER OF THAT CERTAIN TRACT CONVEYED TO WAKEFIELD MILL CREEK L.L.C., BY STATUTORY WARRANTY DEED RECORDED UNDER RECORDING NO. 9609230196;
THENCE SOUTH 53°22'33" EAST, ALONG THE SOUTHERLY LINE OF SAID WAKEFIELD MILL CREEK, L.L.C. TRACT, A DISTANCE OF 310 FEET TO THE TRUE POINT OF BEGINNING; THENCE NORTH 36°37'27" EAST, A DISTANCE OF 396.19 FEET TO A POINT ON THE NORTHEASTERLY LINE OF THAT CERTAIN TRACT CONVEYED TO CLINTON E. CARNELL AND CECILIA A. CARNELL, HIS WIFE, BY DEED RECORDED UNDER RECORDING NO. 9405100186;
THENCE SOUTH 53°22'33" EAST ALONG SAID NORTHEASTERLY LINE, A DISTANCE OF 677.23 FEET TO THE NORTHWEST MARGIN OF THE BOTHELL-EVERETT HIGHWAY (S.R. 527);
THENCE SOUTH 37°31'40" WEST ALONG SAID NORTHWEST MARGIN 396.24 FEET TO THE SOUTHEAST CORNER OF THAT CERTAIN TRACT CONVEYED TO CLINTON E. CARNELL AND CECILIA A. CARNELL, HIS WIFE, BY DEED RECORDED UNDER RECORDING NO. 9405100185;
THENCE NORTH 53°22'33" WEST ALONG THE SOUTHWEST LINE OF SAID CARNELL TRACT, A DISTANCE OF 670.98 FEET TO THE TRUE POINT OF BEGINNING;

EXCEPT THAT PORTION THEREOF CONVEYED TO THE STATE OF WASHINGTON BY WARRANTY DEED RECORDED UNDER RECORDING NO. 9903050785.

SITUATE IN THE COUNTY OF SNOHOMISH, STATE OF WASHINGTON.

VERTICAL DATUM
NAVD-88

BENCHMARK
SNOHOMISH COUNTY SURVEY CONTROL POINT NO. 1642
ELEVATION = 408.92 FEET

EQUIPMENT
THIS SURVEY WAS PERFORMED WITH A TOPCON GPT 2003 ELECTRONIC THEODOLITE READING DIRECT TO 3 SECONDS OF ARC AND MEASURING DISTANCE ±(3+(2PPM X D)) mm. & TOPCON LEGANT/LEGACY - HIPER GPS RECEIVERS MEASURING DISTANCE ±(3+(1PPM X D)) mm. NGS BASELINE COMPARED APRIL 2004.

TABLE OF CONTENTS

1 COVER SHEET
2 PRELIMINARY TESC PLAN
3 PRELIMINARY TESC DETAILS
4 PRELIMINARY SITE PLAN
5 PRELIMINARY GRADING AND UTILITIES PLAN
6 TREE RETENTION PLAN
L-1-L-6 LANDSCAPE PLANS

BOUNDARY DISCLAIMER
THE BOUNDARY SURVEY WAS PERFORMED BY LDC, INC. IN MAY 2013. ANY CHANGES TO THE SITE AFTER THIS DATE WILL NOT BE REFLECTED IN THE PLANS. ANY DISCREPANCIES FOUND BETWEEN WHAT IS SHOWN ON THE PLANS AND WHAT IS NOTED IN THE FIELD SHOULD BE BROUGHT IMMEDIATELY TO THE ATTENTION OF THE ENGINEER.

TOPOGRAPHIC DISCLAIMER
TOPOGRAPHIC SURVEY INFORMATION CONTAINED ON THESE PLANS HAS BEEN PROVIDED BY CORNERSTONE ENGINEERING, INC. LDC, INC. (LAND DEVELOPMENT CONSULTANTS, INC.) ASSUMES NO LIABILITY AS TO THE ACCURACY AND COMPLETENESS OF THIS DATA. ANY DISCREPANCIES FOUND BETWEEN WHAT IS SHOWN ON THE PLANS AND WHAT IS NOTED IN THE FIELD SHOULD BE BROUGHT IMMEDIATELY TO THE ATTENTION OF THE ENGINEER.

Call 2 Business Days Before You Dig
811 or 1-800-424-5555
Utilities Underground Location Center

REVISIONS

NO.	DATE	DESCRIPTION	BY
1	12-01-16	REVISED PER CITY COMMENTS	MEV

LDC
THE CIVIL ENGINEERING GROUP
Engineering
Structural
Planning
Survey
20210 142nd Avenue NE
Woodinville, WA 98072
Ph. 425.806.1869
Fx. 425.482.2893
www.LDCcorp.com

CSA REAL ESTATE, LLC

ARENA SPORTS MILL CREEK
COVER SHEET

MARK E. VILLWOCK
STATE OF WASHINGTON
40908
REGISTERED PROFESSIONAL ENGINEER
12-01-16

JOB NUMBER:	16-115
DRAWING NAME:	16115P-CS01
DESIGNER:	MEV
DRAFTING BY:	BPC
DATE:	9-27-16
SCALE:	1"=60'
JURISDICTION:	MILL CREEK

CS-01
SHEET 1 OF 6

Drawing: P:\2016\16-115 Mill Creek Commercial\Drawings\Preliminary\16115P-CS01.dwg Plotted: Dec 02, 2016 - 8:31am

A PORTION OF THE NE 1/4 OF SECTION 31, TWP. 28 N., RGE. 5 E., W.M., CITY OF MILL CREEK, SNOHOMISH COUNTY, WASHINGTON

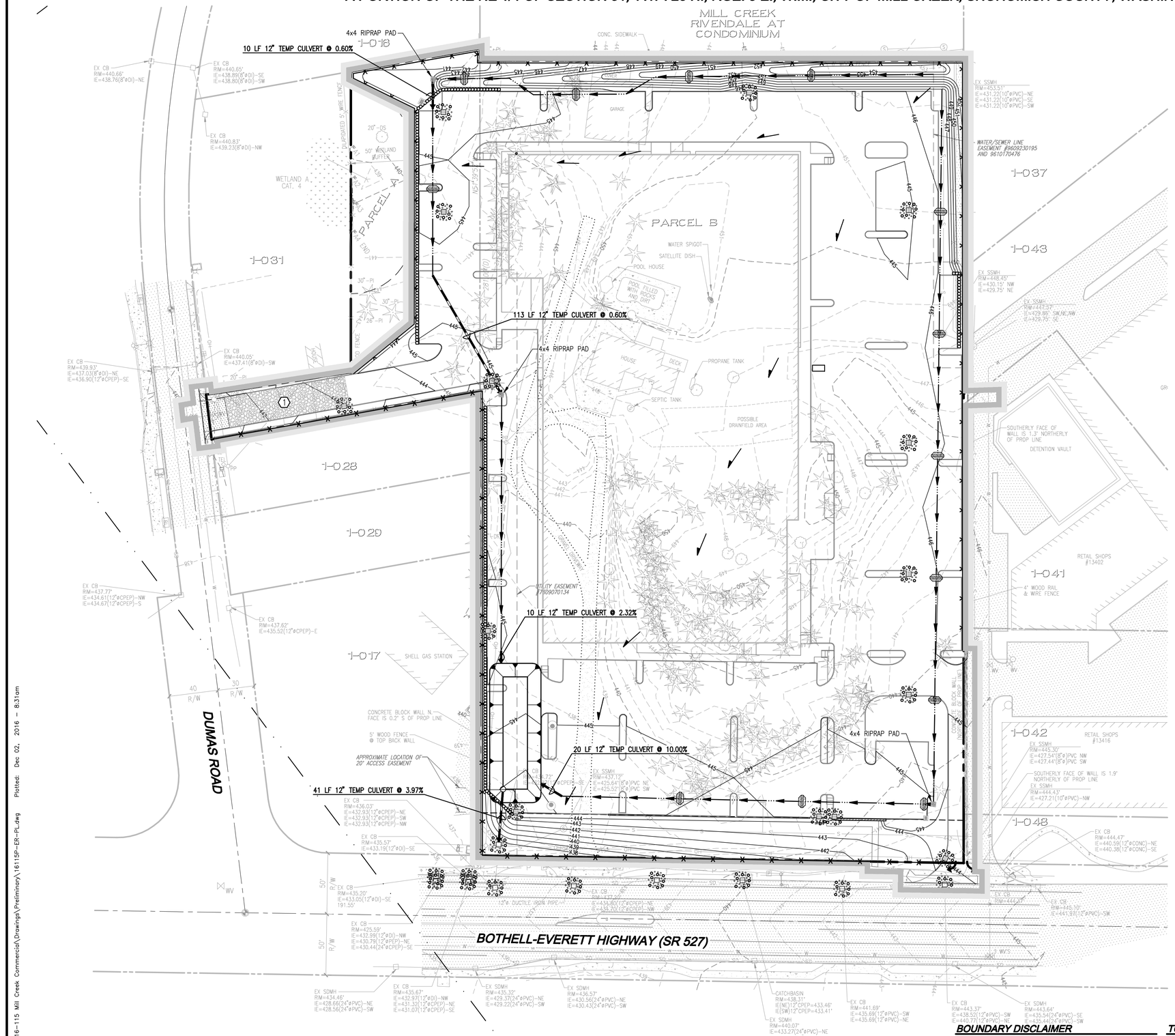

SCALE: 1" = 40'

40 0 40 80

LEGEND

- CLEARING LIMITS
- SILT FENCE
- CONVEYANCE SWALE
- ROCK CONSTRUCTION ENTRANCE
- CATCH BASIN PROTECTION
- TESC POND
- PRE DEVELOPMENT DRAINAGE PATTERN
- POST DEVELOPMENT DRAINAGE PATTERN
- INSTALL CHECK DAM EVERY 100' OR 2' OF ELEVATION CHANGE

TESC POND	
BOTTOM ELEVATION	434
BOTTOM AREA (SF)	2,046
TOP ELEVATION	438
TOP AREA (SF)	5310
SIDE SLOPES	3:1
OVERFLOW ELEV.	434.5
OUTLET INVERT ELEV.	434.5
ORIFICE INVERT ELEV.	434
ORIFICE SIZE	3"ø

BOUNDARY DISCLAIMER

THE BOUNDARY SURVEY WAS PERFORMED BY LDC, INC. IN MAY 2013. ANY CHANGES TO THE SITE AFTER THIS DATE WILL NOT BE REFLECTED IN THE PLANS. ANY DISCREPANCIES FOUND BETWEEN WHAT IS SHOWN ON THE PLANS AND WHAT IS NOTED IN THE FIELD SHOULD BE BROUGHT IMMEDIATELY TO THE ATTENTION OF THE ENGINEER.

TOPOGRAPHIC DISCLAIMER

TOPOGRAPHIC SURVEY INFORMATION CONTAINED ON THESE PLANS HAS BEEN PROVIDED BY CORNERSTONE ENGINEERING, INC. LDC, INC. (LAND DEVELOPMENT CONSULTANTS, INC.) ASSUMES NO LIABILITY AS TO THE ACCURACY AND COMPLETENESS OF THIS DATA. ANY DISCREPANCIES FOUND BETWEEN WHAT IS SHOWN ON THE PLANS AND WHAT IS NOTED IN THE FIELD SHOULD BE BROUGHT IMMEDIATELY TO THE ATTENTION OF THE ENGINEER.

Call 2 Business Days Before You Dig
811 or 1-800-424-5555
Utilities Underground Location Center

REVISIONS

NO.	DATE	DESCRIPTION	BY
1	12-01-16	REVISED PER CITY COMMENTS	MEV

LDC
THE CIVIL ENGINEERING GROUP
Engineering
Structural
Planning
Survey
20210 142nd Avenue NE
Woodinville, WA 98072
Ph. 425.806.1869
Fx. 425.482.2893
www.LDCcorp.com

CSA REAL ESTATE, LLC

ARENA SPORTS MILL CREEK

PRELIMINARY TESC PLAN

MARK E. VILLWOCK
STATE OF WASHINGTON
40908
REGISTERED PROFESSIONAL ENGINEER
12-01-16

JOB NUMBER:	16-115
DRAWING NAME:	16115P-ER-PL
DESIGNER:	MEV
DRAFTING BY:	BPC
DATE:	9-27-16
SCALE:	AS NOTED
JURISDICTION:	MILL CREEK

ER-01

SHEET 2 OF 6

Drawing: P:\2016\16-115 Mill Creek Commercial\Drawings\Preliminary\16115P-ER-PL.dwg Plotted: Dec 02, 2016 - 8:31am

A PORTION OF THE NE 1/4 OF SECTION 31, TWP. 28 N., RGE. 5 E., W.M., CITY OF MILL CREEK, SNOHOMISH COUNTY, WASHINGTON

GENERAL PLAN NOTES

1. ALL WORK AND MATERIALS SHALL BE ACCORDING TO THE LATEST ADDITION OF "STANDARD SPECIFICATIONS FOR ROAD, BRIDGE, AND MUNICIPAL CONSTRUCTION" PREPARED BY WASHINGTON STATE DEPARTMENT OF TRANSPORTATION (WSDOT), CITY OF MILL CREEK STANDARD PLANS, AND ANY CONDITIONS OF APPROVAL. IT SHALL BE THE SOLE RESPONSIBILITY OF THE APPLICANT AND THE PROFESSIONAL CIVIL ENGINEER TO CORRECT ANY ERROR, OMISSIONS, OR VARIATION FROM THE ABOVE REQUIREMENTS FOUND IN THESE PLANS. ALL CORRECTIONS SHALL BE AT NO ADDITIONAL COST OR LIABILITY TO THE CITY OF MILL CREEK.
2. ALL WORK WITHIN THE SITE SHALL BE SUBJECT TO THE INSPECTION OF THE CITY ENGINEER OR DESIGNATED REPRESENTATIVE.
3. PRIOR TO BEGINNING ROAD CONSTRUCTION, THE APPLICANT, THEIR ENGINEER, AND ROAD CONTRACTOR SHALL MEET WITH THE DEPARTMENT OF PUBLIC WORKS FOR A PRE-CONSTRUCTION MEETING.
4. A COPY OF THESE APPROVED PLANS MUST BE ON THE SITE WHENEVER CONSTRUCTION IS IN PROGRESS.
5. PRIOR TO ANY SITE CONSTRUCTION THAT INCLUDES CLEARING/LOGGING OR GRADING THE SITE/LOT CLEARING LIMITS SHALL BE LOCATED AND IDENTIFIED BY THE PROJECT SURVEYOR/ENGINEER AS REQUIRED BY THESE PLANS AND APPROVED BY THE CITY.
6. THE TEMPORARY EROSION/SEDIMENTATION CONTROL BMP'S SHALL BE INSTALLED PRIOR TO ANY GRADING OR EXTENSIVE LAND CLEARING IN ACCORDANCE WITH APPROVED CONSTRUCTION STORMWATER POLLUTION PREVENTION PLAN (SWPPP). THESE BMP'S MUST BE SATISFACTORILY MAINTAINED UNTIL CONSTRUCTION AND LANDSCAPING IS COMPLETED AND THE POTENTIAL FOR ON-SITE EROSION HAS PASSED.
7. PUBLIC STREETS SHALL BE CLEANED ONCE PER DAY OR AS DIRECTED BY THE CITY. FLUSHING OF STREETS WITH WATER WILL NOT BE ALLOWED.
8. LOCATIONS OF EXISTING UTILITIES ARE APPROXIMATE. THE CONTRACTOR SHALL BE RESPONSIBLE FOR VERIFYING THE LOCATIONS OF EXISTING UTILITIES PRIOR TO CONSTRUCTION. UTILITIES SHOWN HERE ARE FOR THE PURPOSES OF ASSISTING THE CONTRACTOR IN LOCATING SAID UTILITIES. CONTRACTOR SHALL CONTACT UNDERGROUND UTILITIES LOCATION CENTER (1-800-424-5555) 48 HOURS PRIOR TO BEGINNING OF CONSTRUCTION AND OBTAIN ON-SITE UTILITY LOCATIONS.
9. THE CONTRACTOR SHALL COMPLY WITH ALL OTHER NECESSARY PERMITS AND REQUIREMENTS BY THE CITY OF MILL CREEK GOVERNING AUTHORITY/AGENCY.
10. UNLESS OTHERWISE APPROVED BY THE CITY ENGINEER, FROM OCTOBER 1 THROUGH APRIL 30, NO SOILS SHALL REMAIN EXPOSED AND UNWORKED FOR MORE THAN 2 DAYS AND FROM MAY 1 THROUGH SEPTEMBER 30, NO SOILS SHALL REMAIN EXPOSED AND UNWORKED FOR MORE THAN 7 DAYS. ANY UNWORKED SOIL SHALL BE STABILIZED WITH A CITY APPROVED BEST MANAGEMENT PRACTICE (BMP).

STORM DRAINAGE NOTES

1. ALL PIPE SHALL BE PLACED ON STABLE EARTH, OR IF IN THE OPINION OF THE CITY ENGINEER, THE EXISTING FOUNDATION IS UNSATISFACTORY, AND THEN IT SHALL BE EXCAVATED BELOW GRADE AND BACK-FILLED PER STANDARD PLAN STM 01.
2. TRENCH BACK FILL OF NEW UTILITIES AND STORM DRAINAGE FACILITIES SHALL BE COMPACTED TO 95% MAXIMUM DENSITY (MODIFIED PROCTOR) UNDER ROADWAYS AND SIDEWALKS AND 90% MAXIMUM DENSITY (MODIFIED PROCTOR) OFF ROADWAYS.
3. ALL CATCH BASINS TO BE TYPE I UNLESS OTHERWISE NOTED.
4. ALL CATCH BASINS WITH A DEPTH OVER 5.0 FEET TO THE FLOW LINE SHALL BE TYPE II.
5. ALL TYPE II CATCH BASINS AND ALL INLETS AND CATCH BASINS OUTSIDE OF PUBLIC RIGHT OF WAY SHALL HAVE SOLID LOCKING LIDS UNLESS OTHERWISE APPROVED BY THE CITY. CATCH BASINS OUTSIDE THE RIGHT OF WAY COLLECTING SURFACE WATER SHALL HAVE LOCKING GRATES.
6. STANDARD LADDER STEPS SHALL BE PROVIDED IN ALL CATCH BASINS/MANHOLES EXTENDING 5 FEET IN DEPTH.
7. CATCH BASIN FRAME AND GRATES SHALL BE DUCTILE IRON (HS-25 RATING) VANED GRATE (OLYMPIC FOUNDRY ITEM NUMBER SM50VG OR APPROVED EQUAL). THROUGH CURB INLETS SHALL BE 18"X24" DUCTILE IRON-DIAGONAL SLOT GRATE WITH 9" HIGH DIAMOND PLATE HOOD, AND HS-25 RATING (OLYMPIC FOUNDRY ITEM NUMBER SM50VG OR APPROVED EQUAL).
8. THE CONTRACTOR SHALL BE RESPONSIBLE FOR ADJUSTING ALL INLET, AND CATCH BASIN FRAMES AND GRATES JUST PRIOR TO PAVING. DURING OVERLAY PROJECTS, ALL MANHOLES, VALVES, AND MONUMENTS SHALL BE ADJUSTED AFTER PAVING.
9. PRIOR TO SIDEWALK CONSTRUCTION, CONSTRUCT THE LOT DRAINAGE AND/OR STUB OUTS BEHIND SIDEWALK DRAINS AS REQUIRED. POSITIVE DRAINAGE IS TO BE PROVIDED WHERE FEASIBLE WITH CONNECTION TO STORM DRAIN. STUBOUTS SHALL BE MARKED WITH 2"X4" AND LABELED "STORM."
10. STORM WATER RETENTION/DETENTION FACILITIES, CONTROL STRUCTURES, STORM DRAINAGE PIPES AND CATCH BASINS SHALL BE JETTED AND CLEANED PRIOR TO ACCEPTANCE.
11. PIPE SPECIFICATION: ALL STORM DRAIN PIPES SHALL BE 12" MIN. DIAMETER. PIPE MATERIAL, JOINTS AND PROTECTIVE TREATMENT, SHALL BE IN ACCORDANCE WITH WSDOT STANDARD SPECIFICATIONS, SECTION 9.05 AND AASHTO AND ASTM DESIGNATIONS AS NOTED BELOW.

MATERIALS ALLOWED FOR STORM DRAIN LINES:

- PLAIN CONCRETE PIPE (CP)
- REINFORCED CONCRETE PIPE (RCP)
- ALUMINUM SPIRAL RI PIPE (ASRP)
- ASTM D3034 PVC
- HIGH DENSITY POLYETHYLENE PIPE (HDPE) SMOOTH INTERIOR -DUAL AND TRIPLE WALL (12"-24" PIPE SHALL BE DUAL WALL)

MATERIALS ALLOWED FOR 6" ROOF DRAIN LINES.

- SDR35 SEWER PIPE (ASTM D3034 PVC)

ALLOWABLE JOINTS:

- CONCRETE PIPE SHALL BE RUBBER GASKETED.
- SPIRAL RIB PIPE SHALL BE "HAT BANDED" WITH NEOPRENE GASKETS.
- PVC PIPE SHALL BE RUBBER GASKETED.
- HDPE SHALL BE BELL-AND-SPIGOT, CLEATED BELL, OR SPLIT, INTERNAL AND SNAP COUPLERS.

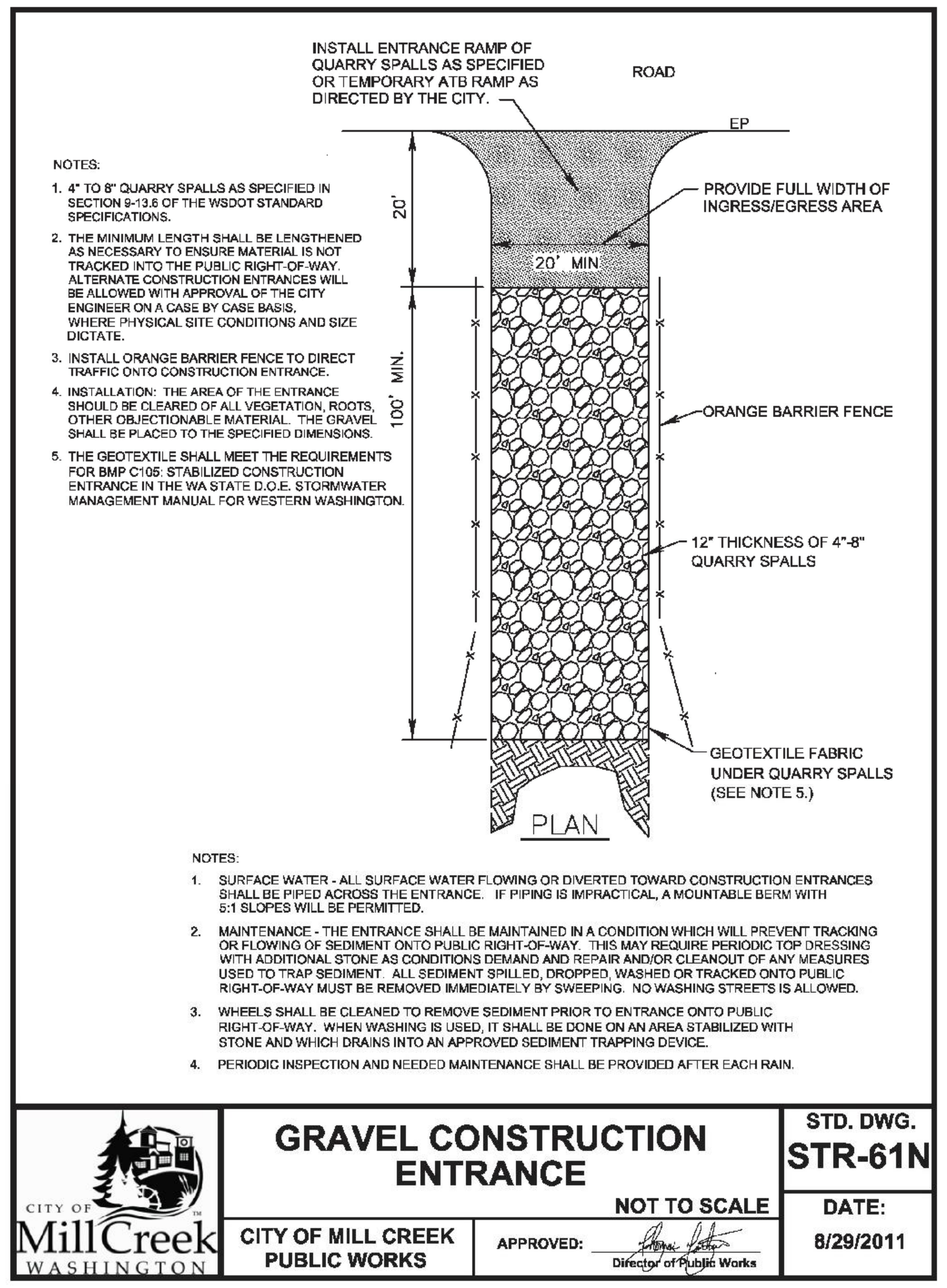

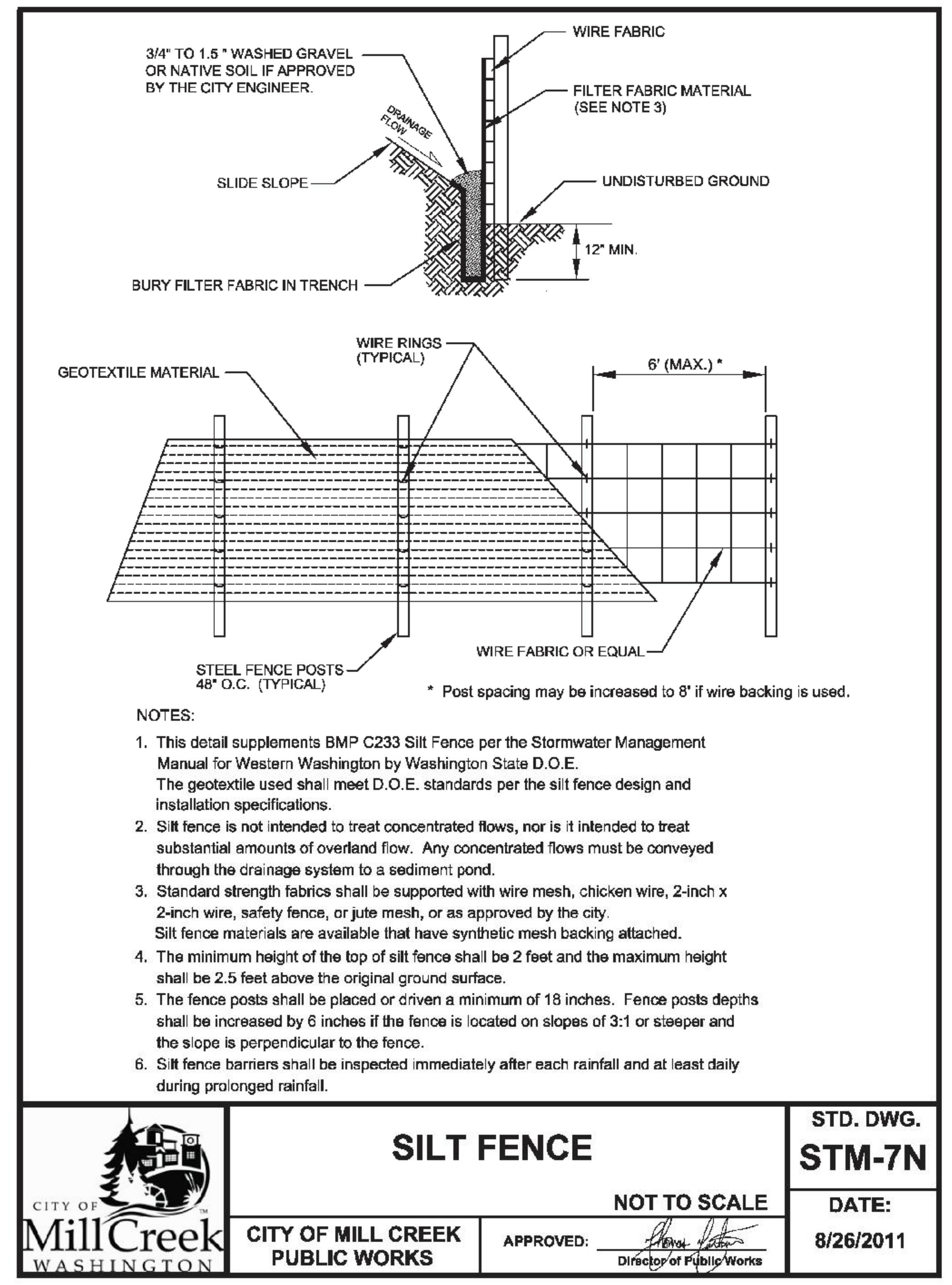

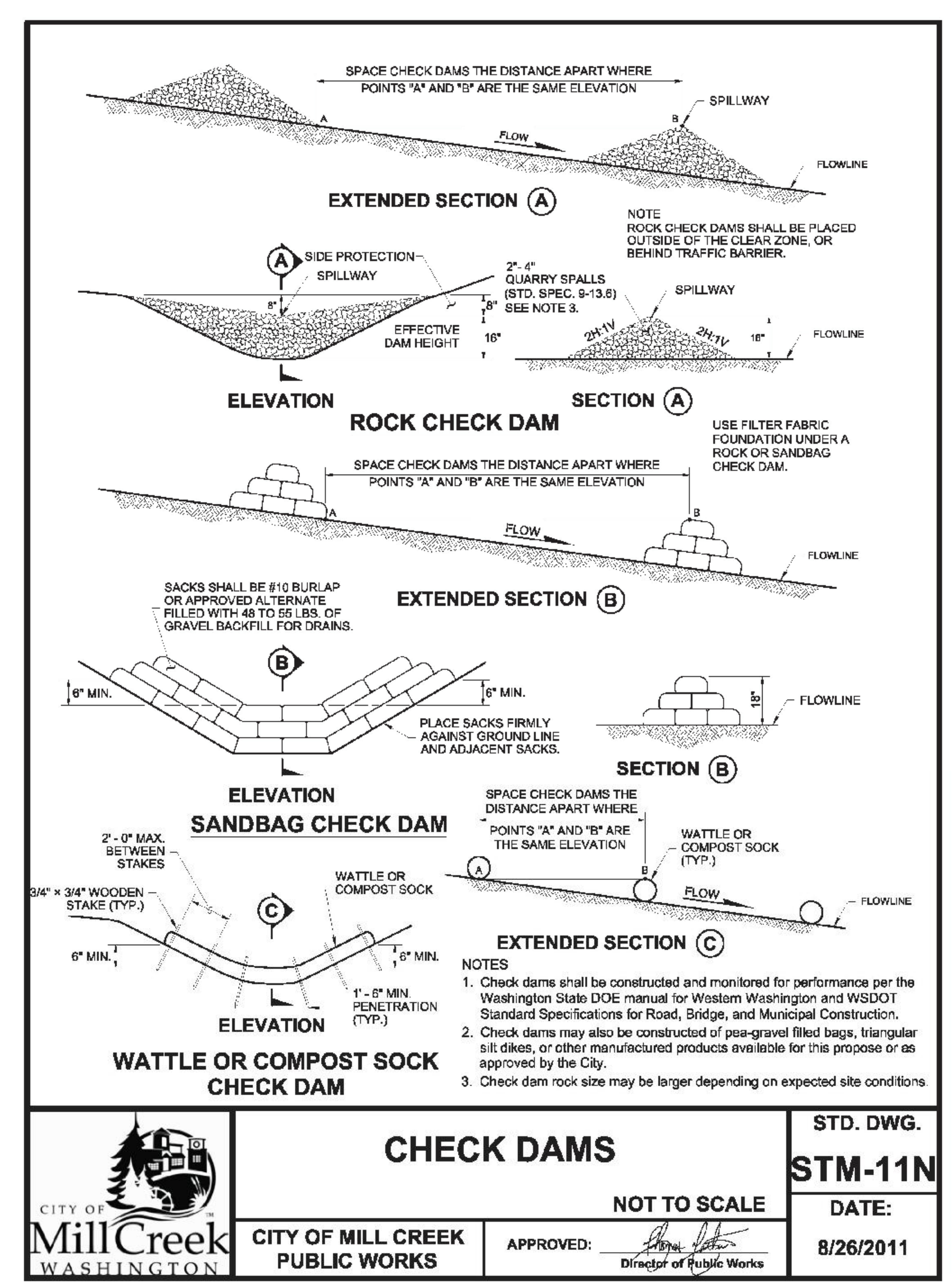

DRAWN BY: LISA CYFORD

NOTES

1. Size the Below Inlet Grate Device (BIGD) for the storm water structure it will service.
2. The BIGD shall have a built-in high-flow relief system (overflow bypass).
3. The retrieval system must allow removal of the BIGD without spilling the collected material.
4. Perform maintenance in accordance with Standard Specification 8-01.3(15).

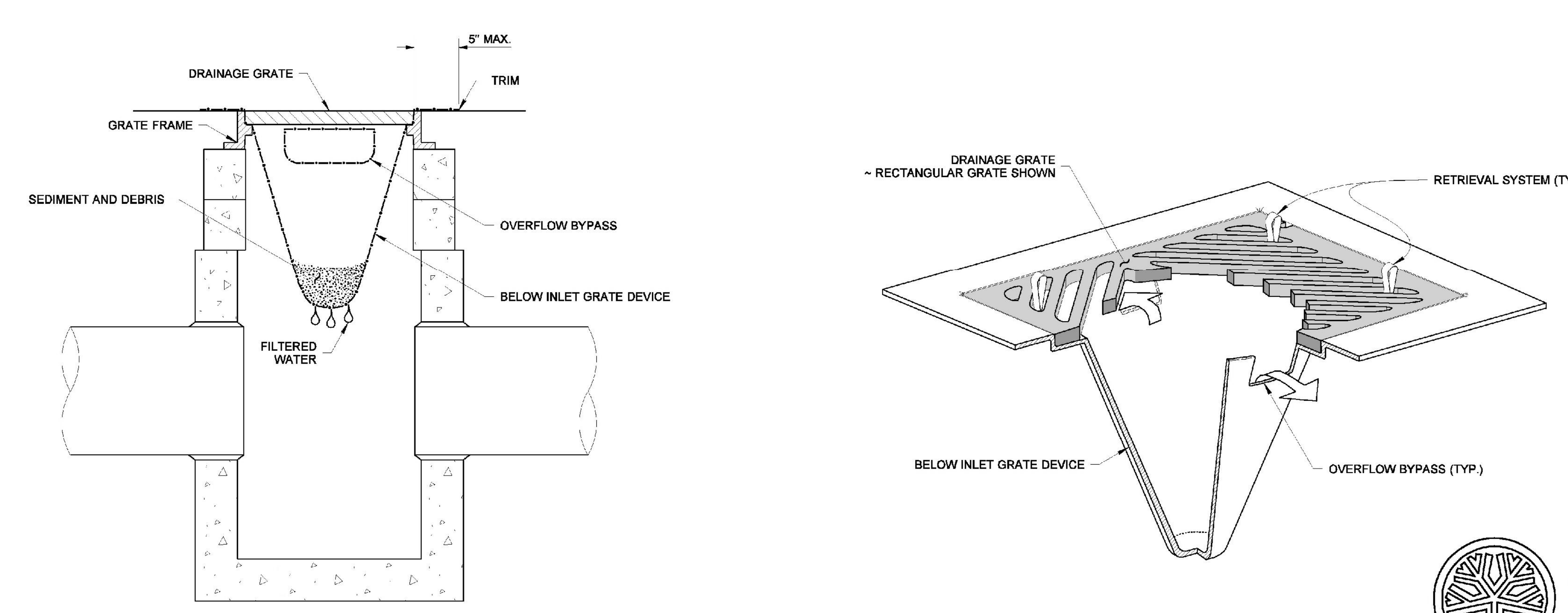

SECTION VIEW
NOT TO SCALE

ISOMETRIC VIEW

STATE OF WASHINGTON REGISTERED LANDSCAPE ARCHITECT
MARK W. MAURER
CERTIFICATE NO. 000598

NOTE: THIS PLAN IS NOT A LEGAL ENGINEERING DOCUMENT BUT AN ELECTRONIC DUPLICATE. THE ORIGINAL, SIGNED BY THE ENGINEER AND APPROVED FOR PUBLICATION, IS KEPT ON FILE AT THE WASHINGTON STATE DEPARTMENT OF TRANSPORTATION. A COPY MAY BE OBTAINED UPON REQUEST.

STORM DRAIN INLET PROTECTION

STANDARD PLAN I-40.20-00

SHEET 1 OF 1 SHEET

APPROVED FOR PUBLICATION
Pasco Bakotich III — 09-20-07
STATE DESIGN ENGINEER — DATE
Washington State Department of Transportation

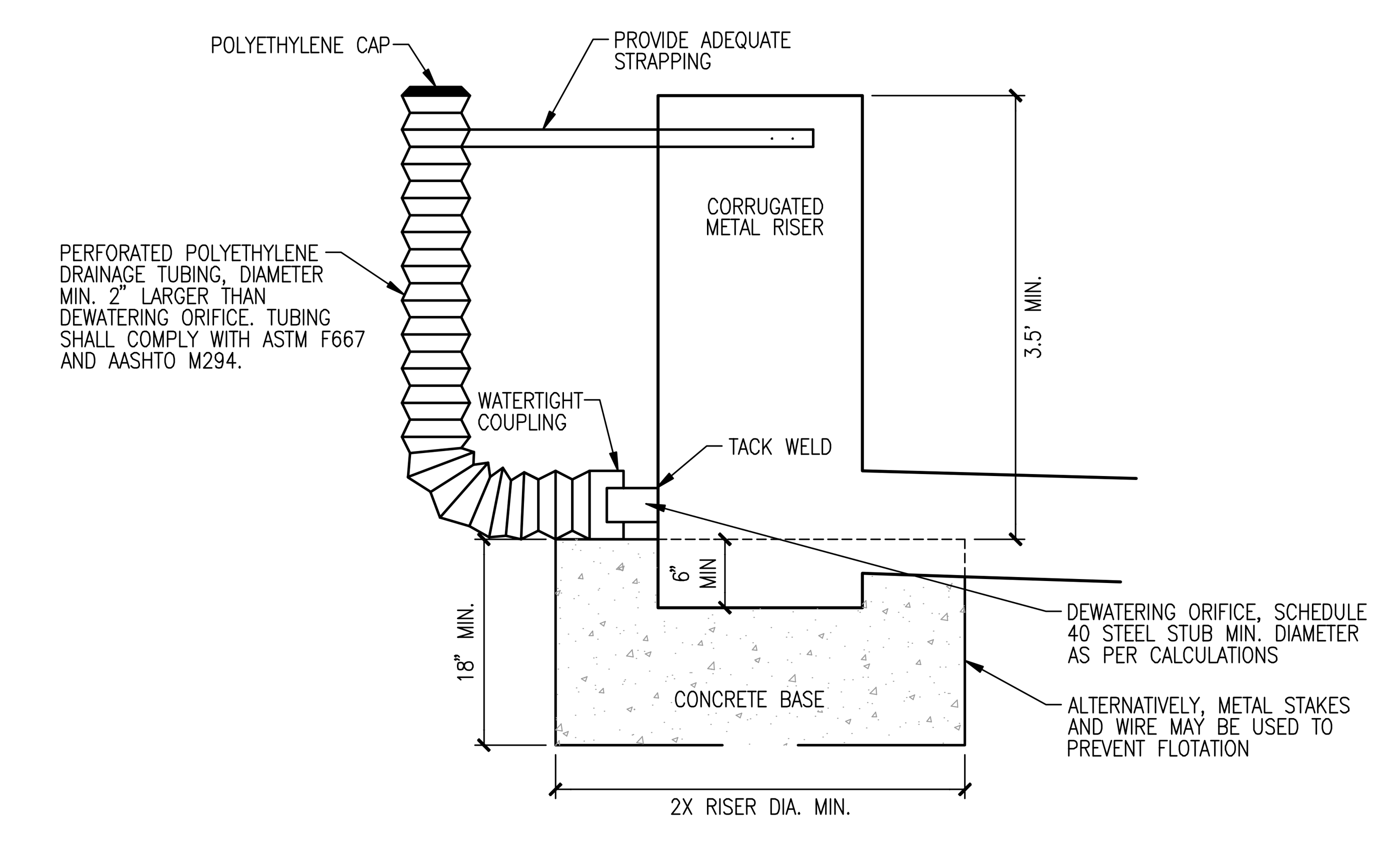

SEDIMENT POND RISER DETAIL
NOT TO SCALE

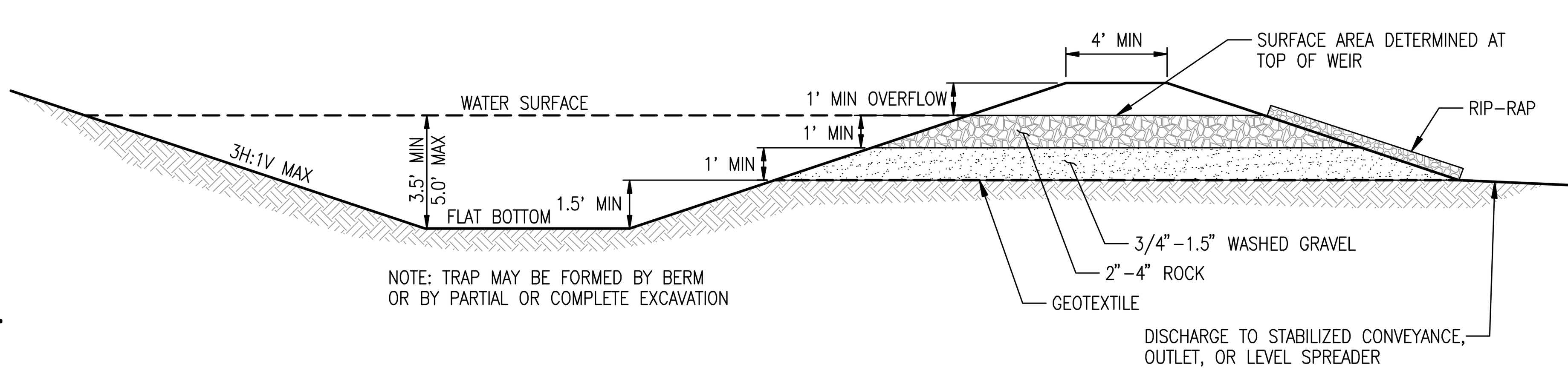

TEMPORARY SEDIMENT POND
NOT TO SCALE

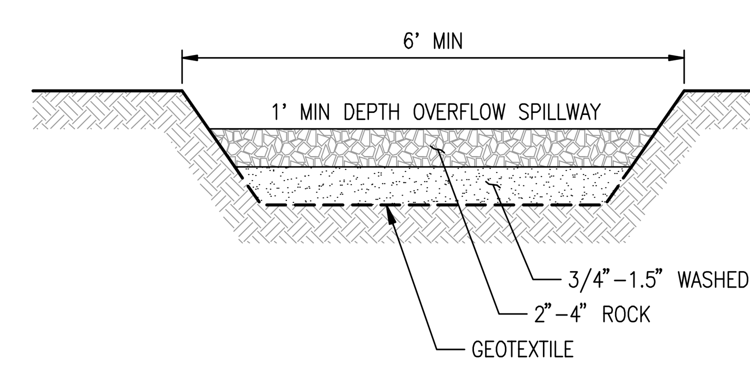

SEDIMENT POND OUTLET
NOT TO SCALE

BOUNDARY DISCLAIMER

THE BOUNDARY SURVEY WAS PERFORMED BY LDC, INC. IN MAY 2013. ANY CHANGES TO THE SITE AFTER THIS DATE WILL NOT BE REFLECTED IN THE PLANS. ANY DISCREPANCIES FOUND BETWEEN WHAT IS SHOWN ON THE PLANS AND WHAT IS NOTED IN THE FIELD SHOULD BE BROUGHT IMMEDIATELY TO THE ATTENTION OF THE ENGINEER.

TOPOGRAPHIC DISCLAIMER

TOPOGRAPHIC SURVEY INFORMATION CONTAINED ON THESE PLANS HAS BEEN PROVIDED BY CORNERSTONE ENGINEERING, INC. LDC, INC. (LAND DEVELOPMENT CONSULTANTS, INC.) ASSUMES NO LIABILITY AS TO THE ACCURACY AND COMPLETENESS OF THIS DATA. ANY DISCREPANCIES FOUND BETWEEN WHAT IS SHOWN ON THE PLANS AND WHAT IS NOTED IN THE FIELD SHOULD BE BROUGHT IMMEDIATELY TO THE ATTENTION OF THE ENGINEER.

Call 2 Business Days Before You Dig
811 or 1-800-424-5555
Utilities Underground Location Center

Drawing: P:\2016\16-115 Mill Creek Commercial\Drawings\Preliminary\16115P-ER-DT.dwg Plotted: Dec 02, 2016 - 8:31am

REVISIONS

NO.	DATE	DESCRIPTION	BY
1	12-01-16	REVISED PER CITY COMMENTS	MEV

LDC THE CIVIL ENGINEERING GROUP
Engineering Structural Planning Survey
20210 142nd Avenue NE Woodinville, WA 98072
Ph. 425.806.1869 Fx. 425.482.2893
www.LDCcorp.com

CSA REAL ESTATE, LLC

ARENA SPORTS MILL CREEK

PRELIMINARY TESC DETAILS

MARK E. VILLWOCK — STATE OF WASHINGTON — 40908 — REGISTERED PROFESSIONAL ENGINEER — 12-01-16

JOB NUMBER:	16-115
DRAWING NAME:	16115P-ER-DT
DESIGNER:	MEV
DRAFTING BY:	BPC
DATE:	9-27-16
SCALE:	AS NOTED
JURISDICTION:	MILL CREEK

ER-02

A PORTION OF THE NE 1/4 OF SECTION 31, TWP. 28 N., RGE. 5 E., W.M., CITY OF MILL CREEK, SNOHOMISH COUNTY, WASHINGTON

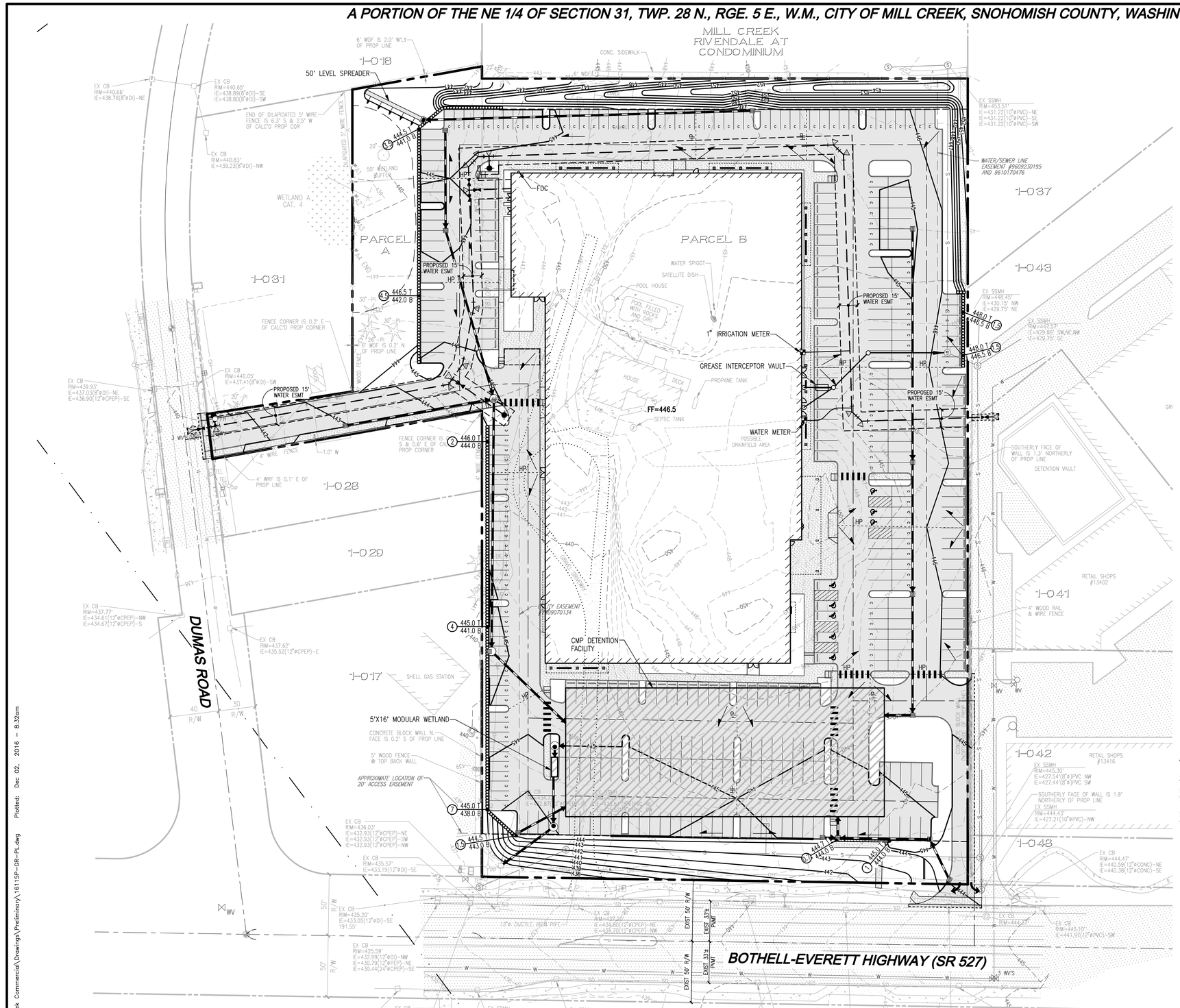

LEGEND

- STORM PIPE
- SEWER PIPE
- WATER PIPE
- CLEARING LIMITS (CLEARING AREA / PROTECTED AREA)
- PAVEMENT FLOW DIRECTION
- HP — HIGH POINT
- LP — LOW POINT
- RETAINING WALL
- ROCKERY WALL

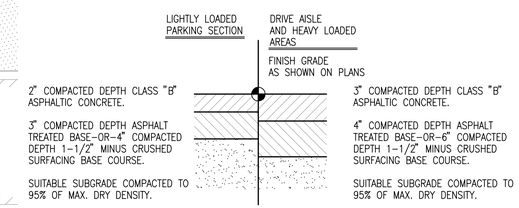

ON-SITE ASPHALT PAVEMENT SECTION OPTIONS
NOT TO SCALE

NOTES

1. SEE BINDING SITE PLAN BY LDC, INC. FOR DIMENSIONED SITE PLAN.
2. ALL EXISTING STRUCTURES TO BE REMOVED.

EARTHWORK QUANTITIES

CUT: 22,000 CY
FILL: 22,000 CY

BOUNDARY DISCLAIMER

THE BOUNDARY SURVEY WAS PERFORMED BY LDC, INC. IN MAY 2013. ANY CHANGES TO THE SITE AFTER THIS DATE WILL NOT BE REFLECTED IN THE PLANS. ANY DISCREPANCIES FOUND BETWEEN WHAT IS SHOWN ON THE PLANS AND WHAT IS NOTED IN THE FIELD SHOULD BE BROUGHT IMMEDIATELY TO THE ATTENTION OF THE ENGINEER.

TOPOGRAPHIC DISCLAIMER

TOPOGRAPHIC SURVEY INFORMATION CONTAINED ON THESE PLANS HAS BEEN PROVIDED BY CORNERSTONE ENGINEERING, INC. LDC, INC. (LAND DEVELOPMENT CONSULTANTS, INC.) ASSUMES NO LIABILITY AS TO THE ACCURACY AND COMPLETENESS OF THIS DATA. ANY DISCREPANCIES FOUND BETWEEN WHAT IS SHOWN ON THE PLANS AND WHAT IS NOTED IN THE FIELD SHOULD BE BROUGHT IMMEDIATELY TO THE ATTENTION OF THE ENGINEER.

Call 2 Business Days Before You Dig
811 or 1-800-424-5555
Utilities Underground Location Center

REVISIONS

NO.	DATE	DESCRIPTION	BY
1	12-01-16	REVISED PER CITY COMMENTS	MEV

LDC
THE CIVIL ENGINEERING GROUP
Engineering
Structural
Planning
Survey
20210 142nd Avenue NE
Woodinville, WA 98072
Ph. 425.806.1869
Fx. 425.482.2893
www.LDCcorp.com

CSA REAL ESTATE, LLC

ARENA SPORTS MILL CREEK

PRELIMINARY GRADING AND UTILITY PLAN

MARK E. VILLINGER — STATE OF WASHINGTON — 40908 — REGISTERED PROFESSIONAL ENGINEER — 12-01-16

JOB NUMBER:	16-115
DRAWING NAME:	16115P-GR-PL
DESIGNER:	MEV
DRAFTING BY:	BPC
DATE:	9-27-16
SCALE:	1"=40'
JURISDICTION:	MILL CREEK

GR-01

SHEET 4 OF 6

Drawing: P:\2016\16-115 Mill Creek Commercial\Drawings\Preliminary\16115P-GR-PL.dwg Plotted: Dec 02, 2016 - 8:32am

A PORTION OF THE NE 1/4 OF SECTION 31, TWP. 28 N., RGE. 5 E., W.M., CITY OF MILL CREEK, SNOHOMISH COUNTY, WASHINGTON

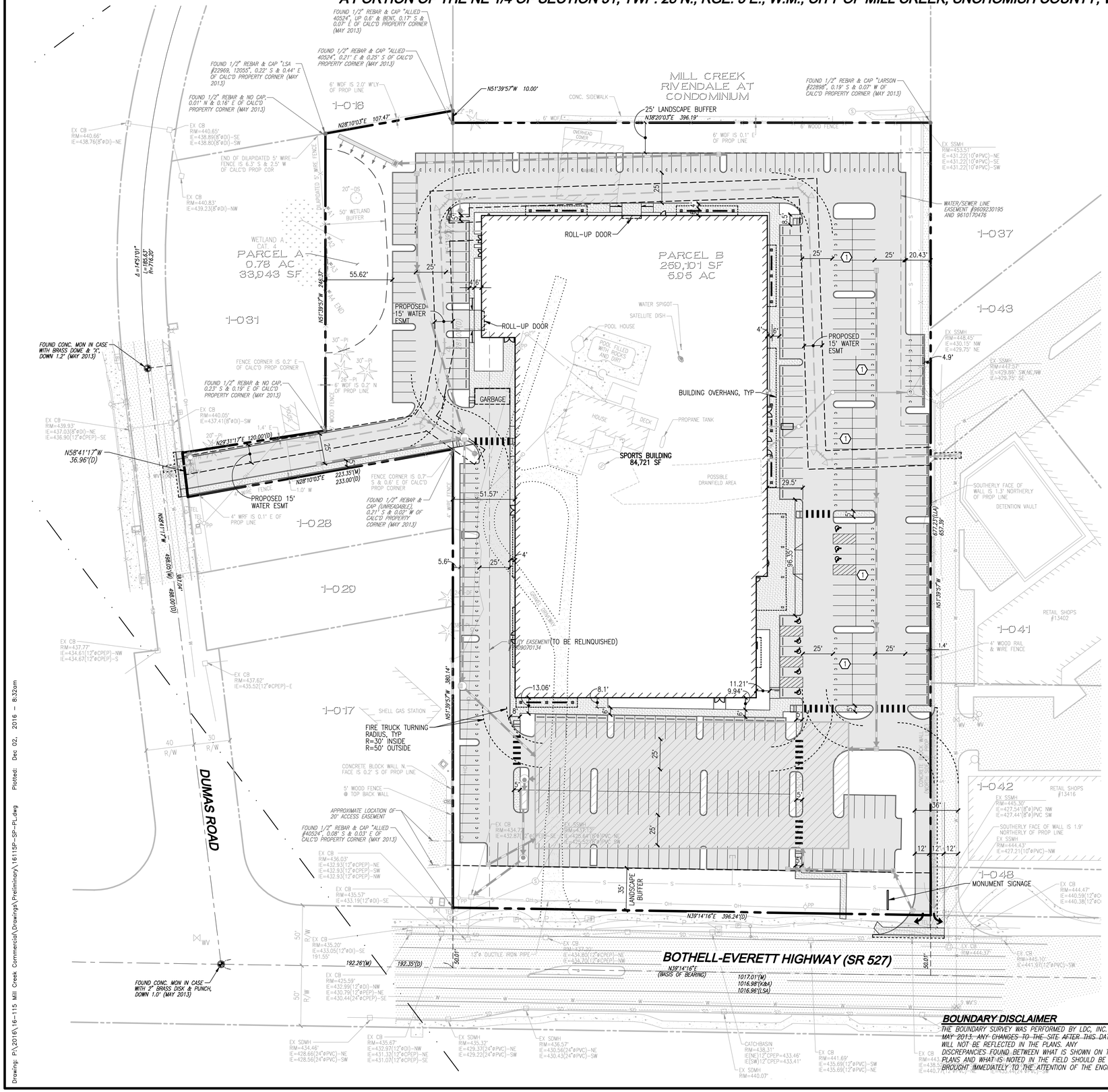

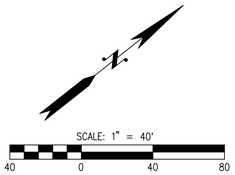

PROJECT INFORMATION

PROJECT TYPE:	PRINCIPAL USE: COMMERCIAL RECREATION FACILITIES	TAX PARCEL #'S:	28053100104000 28053100103400 28053100103200
SITE AREA:	6.73 ACRES (293,167 SF)		
ZONING:	COMMUNITY BUSINESS *		
	PERMITTED	**PROPOSED**	**CODE REFERENCE**
MAX BUILDING COVERAGE:	NONE	84,721 SF	MCMC 17.16.060
HEIGHT LIMIT:	40 FEET	40 FEET	MCMC 17.16.070
MIN LOT SIZE:	7,200 SQUARE FEET	293,167 SF	MCMC 17.16.040

PARKING: PROPOSED–SPORTS BLDG
REQUIRED: 176 STALLS BASED ON USE OF INTERIOR AREAS (SEE ESTIMATE OF REQUIRED AND PROPOSED PARKING SPACES PARKING ANALYSIS INCLUDED WITH THIS SUBMITTAL).

STANDARD:	246		
COMPACT:	128		
ADA:	8		
TOTAL:	382		
REGULAR 90° STALL:	8.5 FT x 19 FT	COMPLIES	MCMC 17.22.080A
COMPACT 90° STALL:	8 FT x 16 FT	COMPLIES	WAC 51–10
DRIVE AISLE @90° PARKING:	25 FT	COMPLIES	
SETBACKS:			
FRONT – BOTHELL– EVERETT HWY.:	35 FT ROADWAY BUFFER		MCMC 17.16.080A
SIDEYARD/REARYARD TO RESIDENTIAL:	25 FT		
PARKING FRONT:	35 FT		
BUFFER:			
WETLAND (CAT. 4)	50 FT		MCMC 18.06.930.B
LANDSCAPE REQUIREMENTS:			
TREES:	1 TREE PER 4 PARKING SPACES		MCMC 17.34.04003(d)
PARKING:	382/4 = 96 TREES NO MORE THAN 10 SPACES BETWEEN LANDSCAPE ISLANDS OR MEDIANS	COMPLIES	MCMC 17.34.04003
LANDSCAPE ISLANDS:	MUST BE 5 FEET WIDE	COMPLIES	MCMC 17.34.04004

* THIS SITE HAS A PRINCIPAL USE AS A COMMERCIAL RECREATION FACILITY PER MCMC17.16.010G.

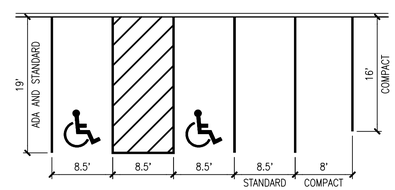

PARKING SPACE DETAIL

NOT TO SCALE

NOTE

1. COMPACT PARKING STALLS ADJACENT TO STANDARD PARKING STALLS ARE TO BE 8.5' WIDE

BOUNDARY DISCLAIMER

THE BOUNDARY SURVEY WAS PERFORMED BY LDC, INC. IN MAY 2013. ANY CHANGES TO THE SITE AFTER THIS DATE WILL NOT BE REFLECTED IN THE PLANS. ANY DISCREPANCIES FOUND BETWEEN WHAT IS SHOWN ON THE PLANS AND WHAT IS NOTED IN THE FIELD SHOULD BE BROUGHT IMMEDIATELY TO THE ATTENTION OF THE ENGINEER.

TOPOGRAPHIC DISCLAIMER

TOPOGRAPHIC SURVEY INFORMATION CONTAINED ON THESE PLANS HAS BEEN PROVIDED BY CORNERSTONE ENGINEERING, INC. LDC, INC. (LAND DEVELOPMENT CONSULTANTS, INC.) ASSUMES NO LIABILITY AS TO THE ACCURACY AND COMPLETENESS OF THIS DATA. ANY DISCREPANCIES FOUND BETWEEN WHAT IS SHOWN ON THE PLANS AND WHAT IS NOTED IN THE FIELD SHOULD BE BROUGHT IMMEDIATELY TO THE ATTENTION OF THE ENGINEER.

Call 2 Business Days Before You Dig
811 or 1-800-424-5555
Utilities Underground Location Center

REVISIONS

NO.	DATE	DESCRIPTION	BY
1	12-01-16	REVISED PER CITY COMMENTS	MEV

LDC
THE CIVIL ENGINEERING GROUP
Engineering
Structural
Planning
Survey
20210 142nd Avenue NE
Woodinville, WA 98072
Ph. 425.806.1869
Fx. 425.482.2893
www.LDCcorp.com

CSA REAL ESTATE, LLC

ARENA SPORTS MILL CREEK

PRELIMINARY SITE PLAN

MARK E. VILLWOCK
STATE OF WASHINGTON
40908
REGISTERED PROFESSIONAL ENGINEER
12-01-16

JOB NUMBER:	16–115
DRAWING NAME:	16115P–SP–PL
DESIGNER:	MEV
DRAFTING BY:	BPC
DATE:	9–27–16
SCALE:	1"=40'
JURISDICTION:	MILL CREEK

SP-01

SHEET 5 OF 6

Drawing: P:\2016\16-115 Mill Creek Commercial\Drawings\Preliminary\16115P-SP-PL.dwg Plotted: Dec 02, 2016 - 8:32am

A PORTION OF THE NE 1/4 OF SECTION 31, TWP. 28 N., RGE. 5 E., W.M., CITY OF MILL CREEK, SNOHOMISH COUNTY, WASHINGTON

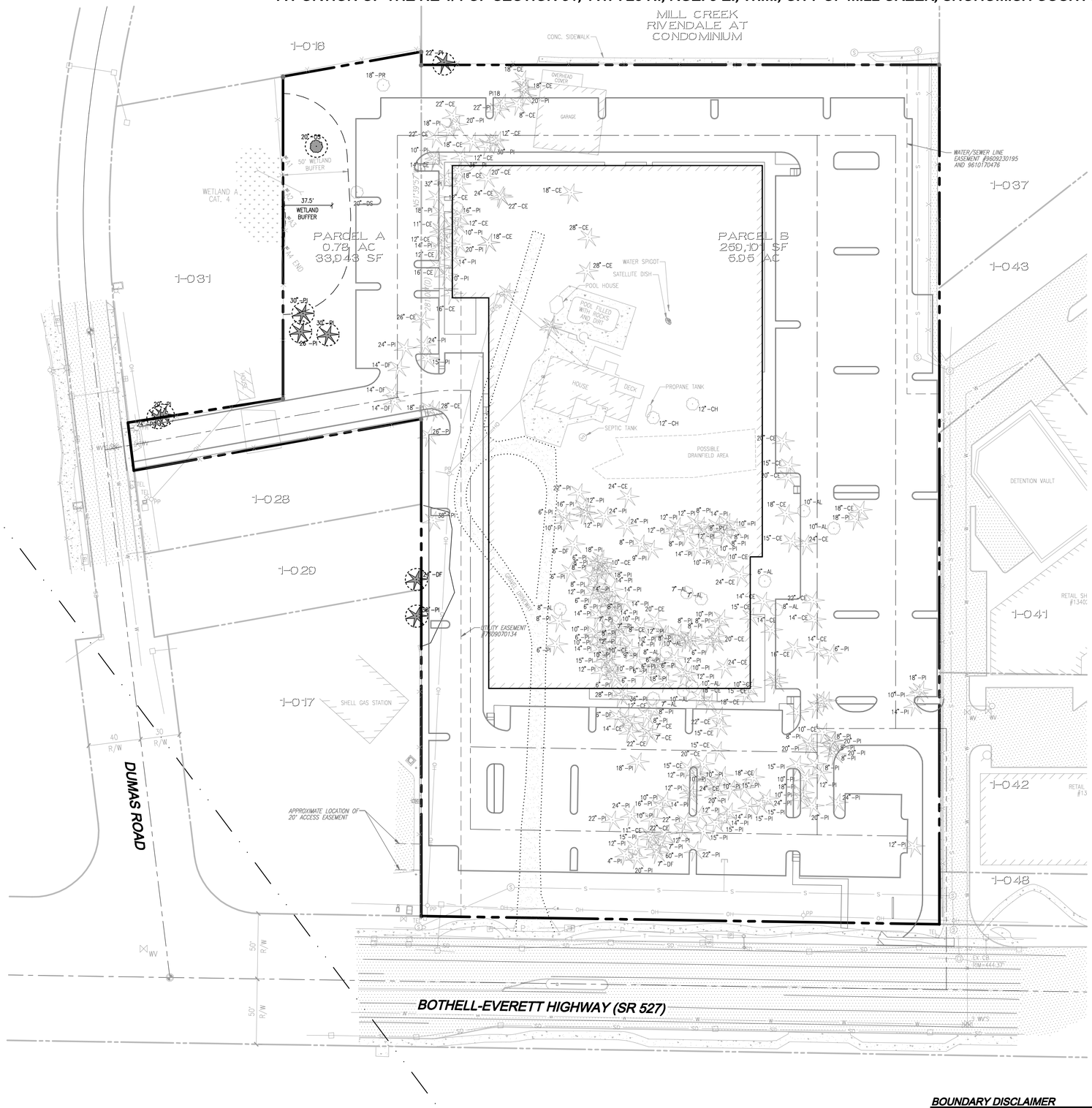

SCALE: 1" = 40'

40 0 40 80

LEGEND

TREE TO REMAIN

TREE TYPE LEGEND

	CONIFEROUS TREE
	DECIDUOUS TREE
XX"-AL	ALDER
XX"-DS	DECIDUOUS
XX"-CH	CHERRY
XX"-CE	CEDAR
XX"-DF	DOUGLAS FIR
XX"-PI	PINE
XX"-PR	POPLAR

NOTES:

TREES THAT ARE TO BE PRESERVED ARE SUBJECT TO THE STANDARDS OUTLINED IN MCMC SECTION 15.10.045 AND PENALTIES ESTABLISHED IN MCMC SECTION 15.10.075.

BOUNDARY DISCLAIMER

THE BOUNDARY SURVEY WAS PERFORMED BY LDC, INC. IN MAY 2013. ANY CHANGES TO THE SITE AFTER THIS DATE WILL NOT BE REFLECTED IN THE PLANS. ANY DISCREPANCIES FOUND BETWEEN WHAT IS SHOWN ON THE PLANS AND WHAT IS NOTED IN THE FIELD SHOULD BE BROUGHT IMMEDIATELY TO THE ATTENTION OF THE ENGINEER.

TOPOGRAPHIC DISCLAIMER

TOPOGRAPHIC SURVEY INFORMATION CONTAINED ON THESE PLANS HAS BEEN PROVIDED BY CORNERSTONE ENGINEERING, INC. LDC, INC. (LAND DEVELOPMENT CONSULTANTS, INC.) ASSUMES NO LIABILITY AS TO THE ACCURACY AND COMPLETENESS OF THIS DATA. ANY DISCREPANCIES FOUND BETWEEN WHAT IS SHOWN ON THE PLANS AND WHAT IS NOTED IN THE FIELD SHOULD BE BROUGHT IMMEDIATELY TO THE ATTENTION OF THE ENGINEER.

Call 2 Business Days Before You Dig
811 or 1-800-424-5555
Utilities Underground Location Center

REVISIONS

NO.	DATE	DESCRIPTION	BY
1	12-01-16	REVISED PER CITY COMMENTS	MEV

LDC
THE CIVIL ENGINEERING GROUP
Engineering
Structural
Planning
Survey
20210 142nd Avenue NE
Woodinville, WA 98072
Ph. 425.806.1869
Fx. 425.482.2893
www.LDCcorp.com

CSA REAL ESTATE, LLC

ARENA SPORTS MILL CREEK

TREE RETENTION PLAN

MARK E. VILLWOCK
STATE OF WASHINGTON
40908
REGISTERED PROFESSIONAL ENGINEER
12-01-16

JOB NUMBER:	16-115
DRAWING NAME:	16115P-TR01
DESIGNER:	MEV
DRAFTING BY:	BPC
DATE:	9-27-16
SCALE:	1"=40'
JURISDICTION:	MILL CREEK

TR-01

SHEET 6 OF 6

Drawing: P:\2016\16-115 Mill Creek Commercial\Drawings\Preliminary\16115P-TR01.dwg Plotted: Dec 02, 2016 - 8:32am

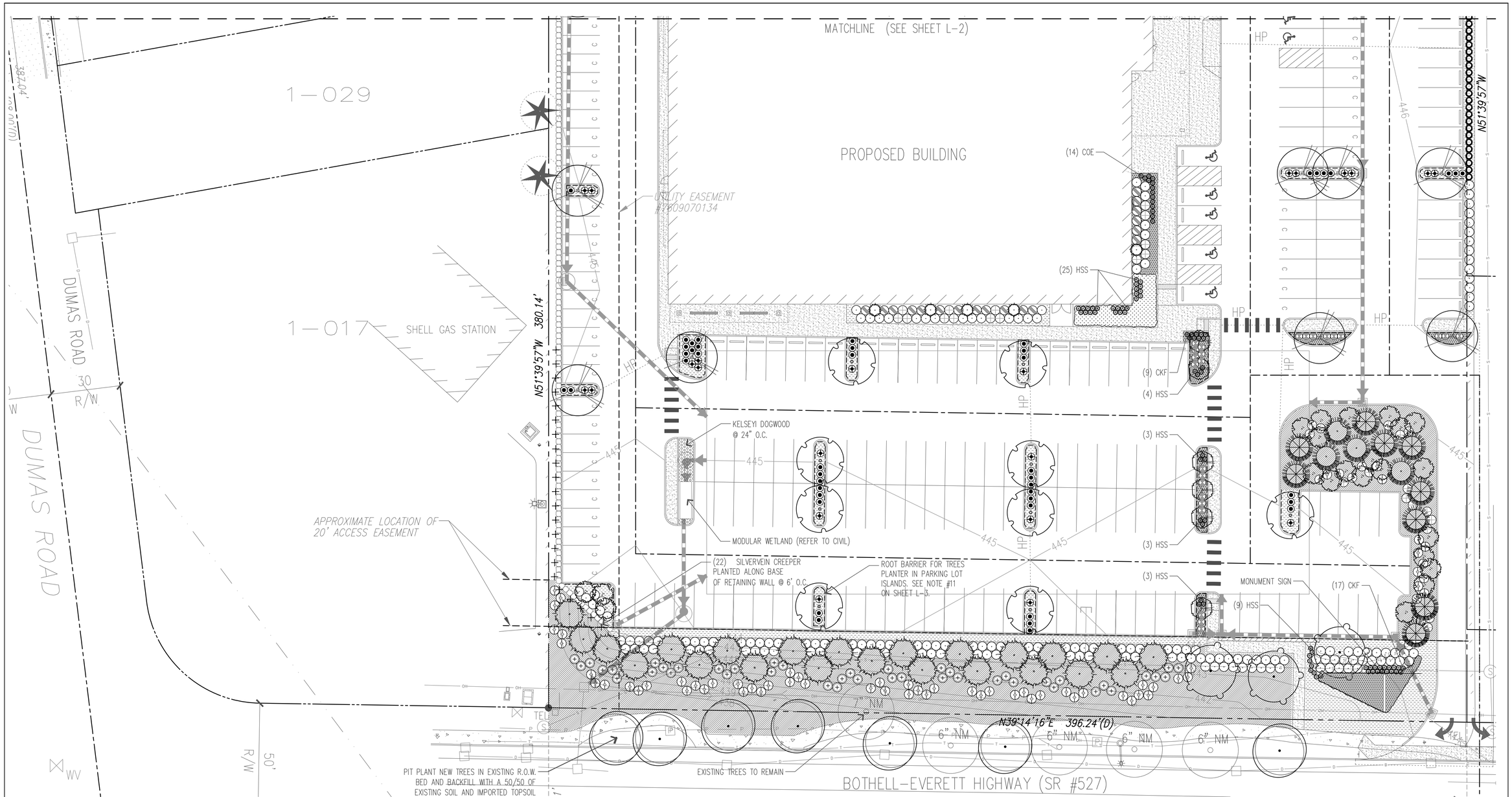

PLANT LEGEND

SYMBOL	BOTANICAL NAME / COMMON NAME	SYMBOL	BOTANICAL NAME / COMMON NAME	SYMBOL	BOTANICAL NAME / COMMON NAME	SYMBOL	BOTANICAL NAME / COMMON NAME
	DECIDUOUS TREES ACER CIRCINATUM / VINE MAPLE ACER PLATANOIDES 'COLUMNARBROAD' / PARKWAY MAPLE ACER T. x ACER P. 'WARRENRED' / PACIFIC SUNSET MAPLE CARPINUS BETULUS 'FRANS FONTAINE' / FRANS FONTAINE HORNBEAM CERCIS CANADAENSIS 'OKLAHOMA' / OKLAHOMA REDBUD FAGUS SYLVATICA 'DAWYCK PURPLE' / DAWYCK PURPLE BEECH ZELCOVA SERRATA 'VILLAGE GREEN' / VILLAGE GREEN ZELCOVA **EVERGREEN TREES** CHAMAECYPARIS OBUTSA 'GRACILIS' / SLENDER HINOKI CALOCEDRUS DECURRENS / INCENSE CEDAR PSEUDOTSUGA MENZIEII / DOUGLAS FIR THUJA PLICATA 'EXCELSA' / WESTERN RED CEDAR		**EVERGREEN SHRUBS** ABELIA X GRANDIFLORA 'ROSE CREEK' / GLOSSY ABELIA ARBUTUS UNEDO 'COMPACTA' / STRAWBERRY TREE ILEX CRENATA 'SKY PENCIL' / SKY PENCIL JAPANESE HOLLY MAHONIA AQUIFOLIUM 'COMPACTA' / COMPACT OREGON GRAPE OSMANTHUS H. 'GOSHIKI' / VARIEGATED OSMANTHUS PRUNUS L. 'OTTO LUYKEN' / OTTO LUYKEN LAUREL SARCOCOCCA RUSCIFOLIA / FRAGRANT SWEETBOX TAXUS 'DARK GREEN SPREADER' / SPREADING YEW THUJA OCC. 'EMERALD GREEN' / EMERALD GREEN PYRAMIDALIS VIBURNUM DAVIDII / DAVID'S VIBURNUM VIBURNUM T. 'SPRING BOUQUET' / SPRING BOUQUET		**DECIDUOUS SHRUBS** BERBERIS T. A. 'HILMOND PILLAR' / HELMOND PILLAR BARBERRY CORNUS SERICEA 'ARCTIC FIRE' / REDTWIG DOGWOOD PHYSOCARPUS O. 'SUMMER WINE' / PACIFIC NINEBARK SPIRAEA X BUMALDA 'ANTHONY WATERER' / SPIREA SPIRAEA JAPONICA 'WALBUMA' / MAGIC CARPET SPIREA SYMPHORICARPOS ALBUS / SNOWBERRY **PERENNIALS / ORNAMENTAL GRASSES** CKF — CALAMAGROSTIS X A. 'KARL FOERSTER" / FEATHER REED GRASS COE — CAREX OSHIMENSIS/ EVEREST VARIEGATED SEDGE HSS — HELICTOTRICHON SEMPERVIRENS 'SHAPHIRE' / BLUE OAT GRASS **VINES** PARTHENOCISSUS HENRYANA / SILVERVINE CREEPER		**GROUNDCOVER** ARCHTOSTAPHYLOS UVA-URSI / KINNIKINNICK CORNUS SERICA 'KELSYI' / DWARF REDTWIG DOGWOOD GAULTHERIA SHALLON / SALAL GERANIUM X C. 'KARMINA' / KARMINA CRANESBILL PRUNUS L. 'MT. VERNON' / MT VERNON LAUREL **WETLAND BUFFER / EROSION CONTROL SEED MIX:**

NOTES

1. REFER TO SHEET L-3 FOR PLANT SCHEDULE, NOTES, AND DETAILS.

PARKING LOT LANDSCAPE CALCULATIONS

TOTAL PARKING SPACES: 382

REQUIRED PARKING LOT TREES: 96 (1 TREE PER 4 PARKING SPACES)
PROVIDED PARKING LOT TREES: 96

LEGEND

---- ROOT BARRIER (REFER TO NOTE #11)

12" F — CALIPER @ DBH / TREE TYPE

SIGNIFICANT TREES TO REMAIN

TREE TYPE ABBREVIATIONS

NM NORWAY MAPLE

LANDSCAPE PLAN

0 10' 20' 40' 80'

SCALE: 1" = 20' - 0"

SHEET SIZE: 24" x 36" AT 100%

WBLA
Landscape Architecture
Site Planning Irrigation
16630 30th Dr. S.E.
Bothell, WA 98012
phone (425) 417-6029

PROJECT:
ARENA SPORTS

LOCATION:
MILL CREEK, WA

CLIENT:
CSA REAL ESTATE, LLC
6840 FORT DENT WAY
SEATTLE, WA 98188

NO.	DATE	REVISION
	09.20.2016	PERMIT
	12.01.2016	PERMIT RESUBMITTAL

DESIGNED CB
DRAWN CB
CHECKED CB

PROFESSIONAL SEAL

STATE OF WASHINGTON REGISTERED LANDSCAPE ARCHITECT
WILLIAM A. BROWN
CERTIFICATE NO. 501

DATE 08.29.2016

PROJECT NO. 201630

TITLE
LANDSCAPE PLAN

SHEET NUMBER
L-1

© WBLA 2015

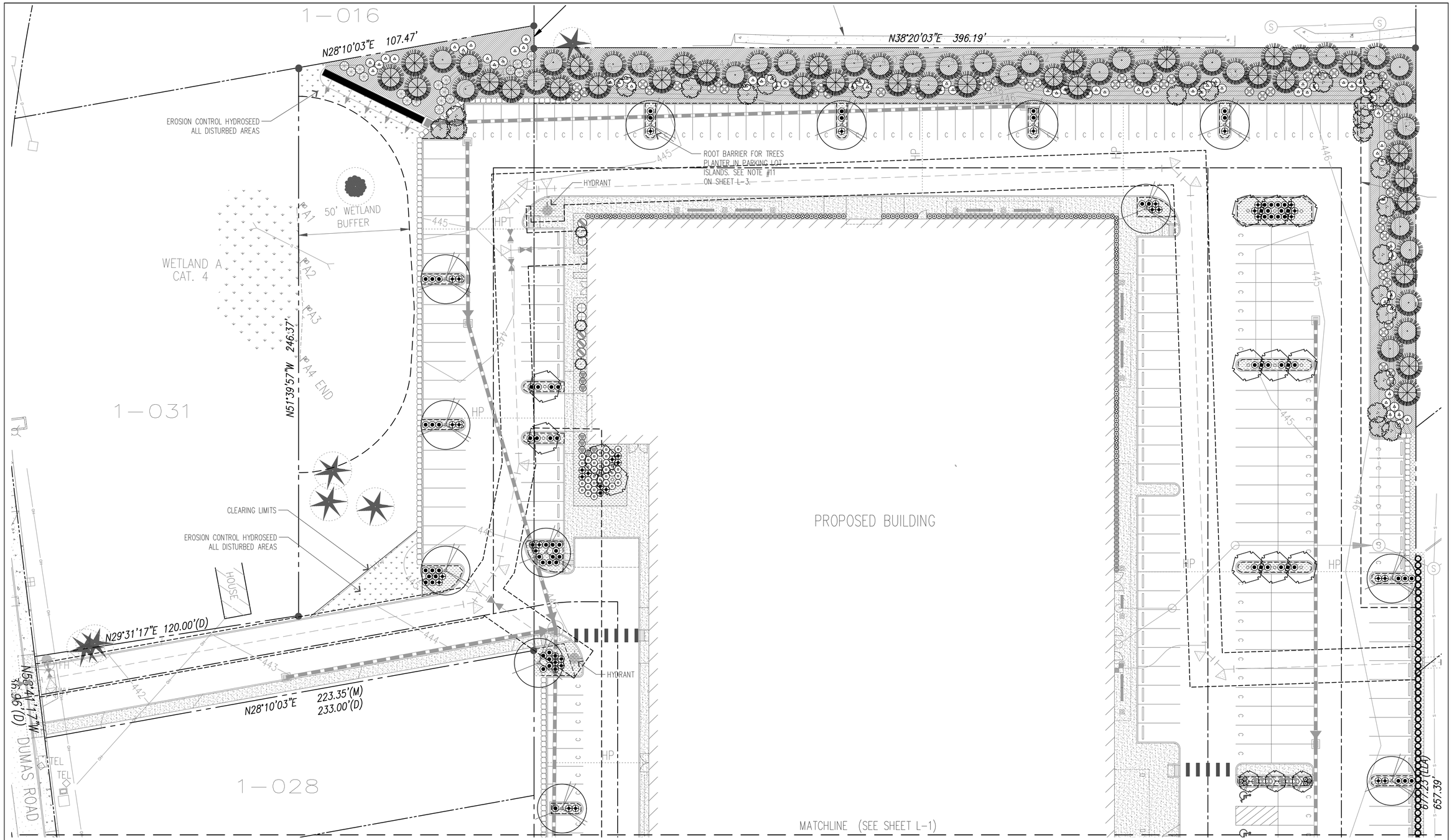

PLANT LEGEND

SYMBOL	BOTANICAL NAME / COMMON NAME
	DECIDUOUS TREES
	ACER CIRCINATUM / VINE MAPLE
	ACER PLATANOIDES 'COLUMNARBROAD' / PARKWAY MAPLE
	ACER T. x ACER P. 'WARRENRED' / PACIFIC SUNSET MAPLE
	CARPINUS BETULUS 'FRANS FONTAINE' / FRANS FONTAINE HORNBEAM
	CERCIS CANADAENSIS 'OKLAHOMA' / OKLAHOMA REDBUD
	FAGUS SYLVATICA 'DAWYCK PURPLE' / DAWYCK PURPLE BEECH
	ZELCOVA SERRATA 'VILLAGE GREEN' / VILLAGE GREEN ZELCOVA
	EVERGREEN TREES
	CHAMAECYPARIS OBUTSA 'GRACILIS' / SLENDER HINOKI
	CALOCEDRUS DECURRENS / INCENSE CEDAR
	PSEUDOTSUGA MENZIEII / DOUGLAS FIR
	THUJA PLICATA 'EXCELSA' / WESTERN RED CEDAR

SYMBOL	BOTANICAL NAME / COMMON NAME
	EVERGREEN SHRUBS
	ABELIA X GRANDIFLORA 'ROSE CREEK' / GLOSSY ABELIA
	ARBUTUS UNEDO 'COMPACTA' / STRAWBERRY TREE
	ILEX CRENATA 'SKY PENCIL' / SKY PENCIL JAPANESE HOLLY
	MAHONIA AQUIFOLIUM 'COMPACTA' / COMPACT OREGON GRAPE
	OSMANTHUS H. 'GOSHIKI' / VARIEGATED OSMANTHUS
	PRUNUS L. 'OTTO LUYKEN' / OTTO LUYKEN LAUREL
	SARCOCOCCA RUSCIFOLIA / FRAGRANT SWEETBOX
	TAXUS 'DARK GREEN SPREADER' / SPREADING YEW
	THUJA OCC. 'EMERALD GREEN' / EMERALD GREEN PYRAMIDALIS
	VIBURNUM DAVIDII / DAVID'S VIBURNUM
	VIBURNUM T. 'SPRING BOUQUET' / SPRING BOUQUET

SYMBOL	BOTANICAL NAME / COMMON NAME
	DECIDUOUS SHRUBS
	BERBERIS T. A. 'HILMOND PILLAR' / HELMOND PILLAR BARBERRY
	CORNUS SERICEA 'ARCTIC FIRE' / REDTWIG DOGWOOD
	PHYSOCARPUS O. 'SUMMER WINE' / PACIFIC NINEBARK
	SPIRAEA X BUMALDA 'ANTHONY WATERER' / SPIREA
	SPIRAEA JAPONICA 'WALBUMA' / MAGIC CARPET SPIREA
	SYMPHORICARPOS ALBUS / SNOWBERRY
	PERENNIALS / ORNAMENTAL GRASSES
CKF	CALAMAGROSTIS X A. 'KARL FOERSTER" / FEATHER REED GRASS
COE	CAREX OSHIMENSIS/ EVEREST VARIEGATED SEDGE
HSS	HELICTOTRICHON SEMPERVIRENS 'SHAPHIRE' / BLUE OAT GRASS
	VINES
	PARTHENOCISSUS HENRYANA / SILVERVINE CREEPER

SYMBOL	BOTANICAL NAME / COMMON NAME
	GROUNDCOVER
	ARCHTOSTAPHYLOS UVA-URSI / KINNIKINNICK
	CORNUS SERICA 'KELSYI' / DWARF REDTWIG DOGWOOD
	GAULTHERIA SHALLON / SALAL
	GERANIUM X C. 'KARMINA' / KARMINA CRANESBILL
	PRUNUS L. 'MT. VERNON' / MT VERNON LAUREL
	WETLAND BUFFER / EROSION CONTROL SEED MIX:

NOTES

1. REFER TO SHEET L-3 FOR PLANT SCHEDULE, NOTES, AND DETAILS.

LANDSCAPE PLAN

0 10' 20' 40' 80'

SCALE: 1" = 20' - 0"

SHEET SIZE: 24" x 36" AT 100%

© WBLA 2015

WBLA
Landscape Architecture
Site Planning Irrigation
16630 30th Dr. S.E.
Bothell, WA 98012
phone (425) 417-6019

PROJECT:
ARENA SPORTS

LOCATION:
MILL CREEK, WA

CLIENT:
CSA REAL ESTATE, LLC
6840 FORT DENT WAY
SEATTLE, WA 98188

NO.	DATE	REVISION
	09.20.2016	PERMIT
	12.01.2016	PERMIT RESUBMITTAL

DESIGNED CB
DRAWN CB
CHECKED CB

PROFESSIONAL SEAL

STATE OF WASHINGTON REGISTERED LANDSCAPE ARCHITECT
WILLIAM A. BROWN
CERTIFICATE NO. 501

DATE 08.29.2016

PROJECT NO. 201630

TITLE
LANDSCAPE PLAN

SHEET NUMBER
L-2

PLANT SCHEDULE

SYMBOL	BOTANICAL NAME / COMMON NAME	QTY	SIZE	REMARKS
	DECIDUOUS TREES			
	ACER CIRCINATUM / VINE MAPLE	48	MIN. 8–10' HT.	B & B
	ACER PLATANOIDES 'COLUMNARBROAD' / PARKWAY MAPLE	7	MIN. 2" CAL.	B & B
	ACER T. x ACER P. 'WARRENRED' / PACIFIC SUNSET MAPLE	21	MIN. 1–3/4" CAL.	B & B
	CARPINUS BETULUS 'FRANS FONTAINE' / FRANS FONTAINE HORNBEAM	13	MIN. 1–3/4" CAL.	B & B
	CERCIS CANADAENSIS 'OKLAHOMA' / OKLAHOMA REDBUD	9	MIN. 1–3/4" CAL.	B & B
	FAGUS SYLVATICA 'DAWYCK PURPLE' / DAWYCK PURPLE BEECH	9	MIN. 1–3/4" CAL.	B & B
	ZELCOVA SERRATA 'VILLAGE GREEN' / VILLAGE GREEN ZELCOVA	3	MIN. 2" CAL.	B & B
	EVERGREEN TREES			
	CHAMAECYPARIS OBUTSA 'GRACILIS' / SLENDER HINOKI	8	MIN. 6' HT.	B & B
	CALOCEDRUS DECURRENS / INCENSE CEDAR	23	MIN. 8' HT.	B & B
	PSEUDOTSUGA MENZIEII / DOUGLAS FIR	39	MIN. 8' HT.	B & B
	THUJA PLICATA 'EXCELSA' / WESTERN RED CEDAR	39	MIN. 8' HT.	B & B
	EVERGREEN SHRUBS			
	ABELIA X GRANDIFLORA 'ROSE CREEK' / GLOSSY ABELIA	18	5 GAL.	
	ARBUTUS UNEDO 'COMPACTA' / STRAWBERRY TREE	67	5 GAL.	
	BERBERIS X G. 'WILLIAM PENN' / WILLIAM PENN BARBERRY	71	1 GAL.	
	ILEX CRENATA 'SKY PENCIL' / SKY PENCIL JAPANESE HOLLY	59	5 GAL.	
	OSMANTHUS H. 'GOSHIKI' / VARIEGATED OSMANTHUS	10	5 GAL.	
	PRUNUS L. 'OTTO LUYKEN' / OTTO LUYKEN LAUREL	163	5 GAL.	
	SARCOCOCCA RUSCIFOLIA / FRAGRANT SWEETBOX	99	5 GAL.	
	TAXUS 'DARK GREEN SPREADER' / SPREADING YEW	122	5 GAL.	
	THUJA OCC. 'EMERALD GREEN' / EMERALD GREEN PYRAMIDALIS	65	MIN. 5' HT.	B & B
	VIBURNUM DAVIDII / DAVID'S VIBURNUM	34	5 GAL.	
	VIBURNUM T. 'SPRING BOUQUET' / SPRING BOUQUET	22	5 GAL.	
	DECIDUOUS SHRUBS			
	BERBERIS T. A. 'HILMOND PILLAR' / HELMOND PILLAR BARBERRY	27	5 GAL.	
	BERBERIS T. 'SUNSATION' / SUNSATION BARBERRY	54	1 GAL.	
	CORNUS SERICEA 'ARCTIC FIRE' / REDTWIG DOGWOOD	18	1 GAL.	
	PHYSOCARPUS O. 'SUMMER WINE' / PACIFIC NINEBARK	43	5 GAL.	
	SPIRAEA X BUMALDA 'ANTHONY WATERER' / SPIREA	36	5 GAL.	
	SPIRAEA JAPONICA 'WALBUMA' / MAGIC CARPET SPIREA	64	1 GAL.	
	PERENNIALS / ORNAMENTAL GRASSES			
CKF	CALAMAGROSTIS X A. 'KARL FOERSTER" / FEATHER REED GRASS	26	1 GAL.	24" O.C.
COE	CAREX OSHIMENSIS/ EVEREST VARIEGATED SEDGE	14	1 GAL.	24" O.C.
HSS	HELICTOTRICHON SEMPERVIRENS 'SHAPHIRE' / BLUE OAT GRASS	50	1 GAL.	24" O.C.
	VINES			
	PARTHENOCISSUS HENRYANA / SILVERVINE CREEPER	22	1 GAL.	6' O.C.
	GROUNDCOVER			
	ARCHTOSTAPHYLOS UVA–URSI / KINNIKINNICK	1,800	4" POT	24" O.C.
	CORNUS SERICA 'KELSYI' / DWARF REDTWIG DOGWOOD	32	1 GAL.	24" O.C.
	GAULTHERIA SHALLON / SALAL	5,300	1 GAL.	24" O.C.
	GERANIUM X 'ROZANNE' / ROZANNE CRANESBILL	220	1 GAL.	24" O.C.
	PRUNUS L. 'MT. VERNON' / MT VERNON LAUREL	100	1 GAL.	24" O.C.
	WETLAND BUFFER / EROSION CONTROL SEED MIX:			
	60–70% FESTUCA ARUNDINACEA / TALL FESCUE			
	10–15% AGROSTIS PALUSTRIIS / SEASIDE BENTGRASS			
	10–15% ALEPOCURUS PRATENSIS / MEADOW FOXTAIL			
	1–6% TRIFOLIUM HYBRIDIUM / ALSIKE CLOVER			
	1–6% AGROSTIS ALBA / REDTOP BENTGRASS			

LANDSCAPE NOTES

1. LANDSCAPE CONTRACTOR TO CLEAR AND GRUB FROM BENEATH EXISTING TREES TO REMAIN. REMOVE ALL BLACKBERRIES, GRASSES, AND OTHER NON NATIVE PLANT MATERIAL.
2. ALL NEW LANDSCAPE AREAS TO BE SET AT 8" MINUS FINISH ELEVATION EXCEPT AREAS WITHIN DRIP LINE OF EXISTING TREES TO REMAIN. NEW LANDSCAPE AREAS TO RECEIVE IMPORTED 3–WAY TOPSOIL TO A MINIMUM DEPTH OF 12". SUBGRADE TO BE SCARIFIED TO A DEPTH OF 12" AND ALL SPOILS (ROCK & DEBRIS > 2" DIA.) TO BE REMOVED PRIOR TO INSTALLATION OF NEW TOPSOIL. INSTALL TOPSOIL IN TWO LIFTS OF 6" EACH. ROTOTILL EACH LIFT TO A DEPTH OF 8" INTO SUBGRADE. PLANTING WITH IN DRIP LINE OF EXISTING TREES TO BE PIT PLANTED WITH A 50/50 MIX OF TOPSOIL AND EXISTING SUBGRADE. PLACE PLANTING TO MINIMIZE DISTURBANCE TO EXISTING ROOTS. 3–WAY IMPORTED TOPSOIL TO BE UNIFORMLY AMENDED FOR FERTILITY AND PH AS RECOMMENDED BY A CURRENT SOILS TEST PROVIDED BY SOIL AND PLANT LABORATORY OR APPROVED EQUAL. (SOIL AND PLANT LABORATORY, INC. 425–746–6665, TEST #A05–2)
3. GROUND COVER TO EXTEND UNDER ALL DECIDUOUS TREE CANOPIES AT THE SPECIFIED SPACING TO PROVIDE COMPLETE COVERAGE IN ALL PLANTING BEDS DESIGNATED TO RECEIVE GROUND COVER. GROUNDCOVER BENEATH EVERGREEN TREES TO MAINTAIN A MINIMUM 3' CLEARANCE FROM BASE OF TRUNK.
4. ALL PLANT MATERIAL HAS BEEN SELECTED TO BE DROUGHT TOLERANT. ALL SUBSTITUTIONS TO BE APPROVED BY THE LANDSCAPE ARCHITECT.
5. LANDSCAPE DRAWINGS ARE BASED ON THE SITE PLAN PREPARED BY LDC CIVIL ENGINEERS. NOTIFY LANDSCAPE ARCHITECT OF ANY FILED CHANGES TO THE SITE PLAN WHICH MAY REQUIRE ADJUSTMENTS TO LANDSCAPE PLAN.
6. ALL NEW AND EXISTING PLANTING BEDS TO RECEIVE FINE (1–1/2" MINUS) BARK MULCH INSTALLED TO A DEPTH OF 2".
8. ALL NEW PLANTINGS (EXCEPT EMERGENT PLANTS) TO BE FERTILIZED WITH STARTER FERTILIZER 2–4–2, APPLIED AT MANUFACTURERS RECOMMENDED RATE AND AGSAFE 20–10–5 21 GRAM PLANT TABS AT MANUFACTURES RECOMMENDED RATE.
9. A SIX–FOOT HIGH TEMPORARY CHAIN LINK FENCE TO BE PLACED TO PROTECT SIGNIFICANT TREES TO REMAIN. INSTALL FENCE POSTS USING CONCRETE PIER BLOCKS ONLY. AVOID DRIVING POSTS OR STAKES INTO MAJOR ROOTS. NO STOCKPILING OF MATERIALS, SOIL, DEBRIS, VEHICLE TRAFFIC, OR STORAGE OF EQUIPMENT SHALL BE ALLOWED WITHIN PROTECTION FENCE. ALL EXCAVATION WITHIN DRIP LINES SHALL BE INSPECTED BY A CERTIFIED ARBORIST BEFORE BACKFILLING. ANY TREE ROOTS REQUIRING REMOVAL SHALL BE CLEANLY CUT TO MINIMIZE DAMAGE TO EXISTING ROOTS TO REMAIN. ALL EXPOSED ROOTS TO BE COVERED WITH SOIL OR DAMP BURLAP ON SAME DAY AS EXPOSED TO PREVENT DRYING BEFORE BACKFILL OCCURS.
10. ALL NEW LANDSCAPE PLANTING TO BE IRRIGATED WITH A FULLY AUTOMATIC IRRIGATION SYSTEM. IRRIGATION SYSTEM TO BE UTILIZE HIGH EFFICIENCY IRRIGATION ELEMENTS INCLUDING A AUTOMATIC ET ADJUSTED IRRIGATION CONTROLLER. REFER TO SHEETS L–4 AND 5 FOR IRRIGATION PLANS.
11. TREES PLANTED IN PARKING LOT ISLAND PLANTERS TO HAVE ROOT BARRIER INSTALLED AS SHOWN ON THE PLANS. PLACED ADJACENT TO THE CURB OR SIDEWALK. ROOT BARRIER TO BE EP SERIES ROOT BARRIER PANELS EP–2450, 24" DEEP PANELS AS MANUFACTURED BY N.D.S. OR APPROVED EQUAL. INSTALLED PER MANUFACTURES RECOMMENDATIONS.

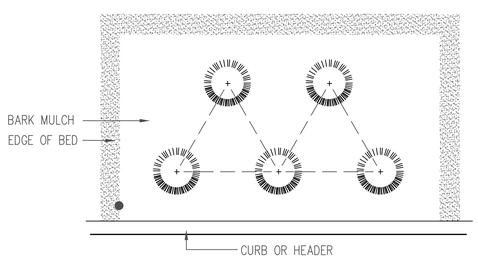

NOTE: SPACING TO BE TRIANG. PER DISTANCE SHOWN ON PLANT SCHEDULE

1 GROUND COVER SPACING
NTS

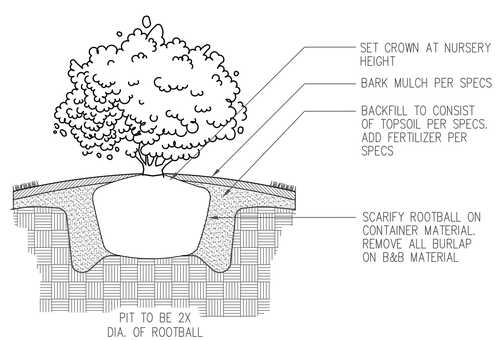

2 SHRUB PLANTING
NTS

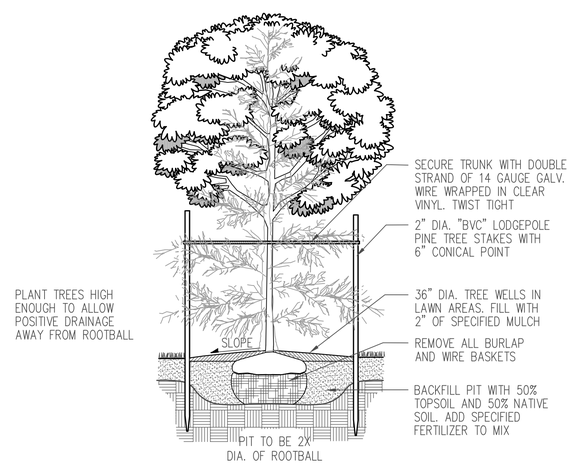

3 TREE STAKING
NTS

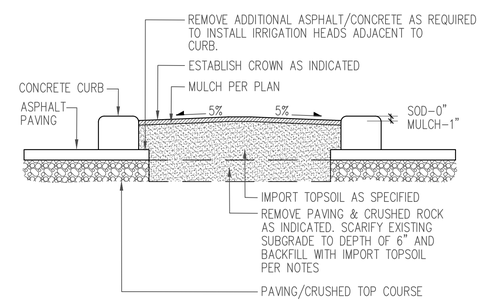

4 LANDSCAPE ISLAND
NTS

WBLA
Landscape Architecture
Site Planning Irrigation
16630 30th Dr. S.E.
Bothell, WA 98012
phone (425) 417–6019

PROJECT:
ARENA SPORTS

LOCATION:
MILL CREEK, WA

CLIENT:
CSA REAL ESTATE, LLC
6840 FORT DENT WAY
SEATTLE, WA 98188

NO.	DATE	REVISION
	09.20.2016	PERMIT
	12.01.2016	PERMIT RESUBMITTAL

DESIGNED CB
DRAWN CB
CHECKED CB

PROFESSIONAL SEAL
STATE OF WASHINGTON
REGISTERED
LANDSCAPE ARCHITECT
WILLIAM A. BROWN
CERTIFICATE NO. 501

DATE 08.29.2016
PROJECT NO. 201630

TITLE
LANDSCAPE SCHEDULE, NOTES & DETAILS

SHEET NUMBER
L-3

SHEET SIZE: 24" x 36" AT 100%

© WBLA 2015

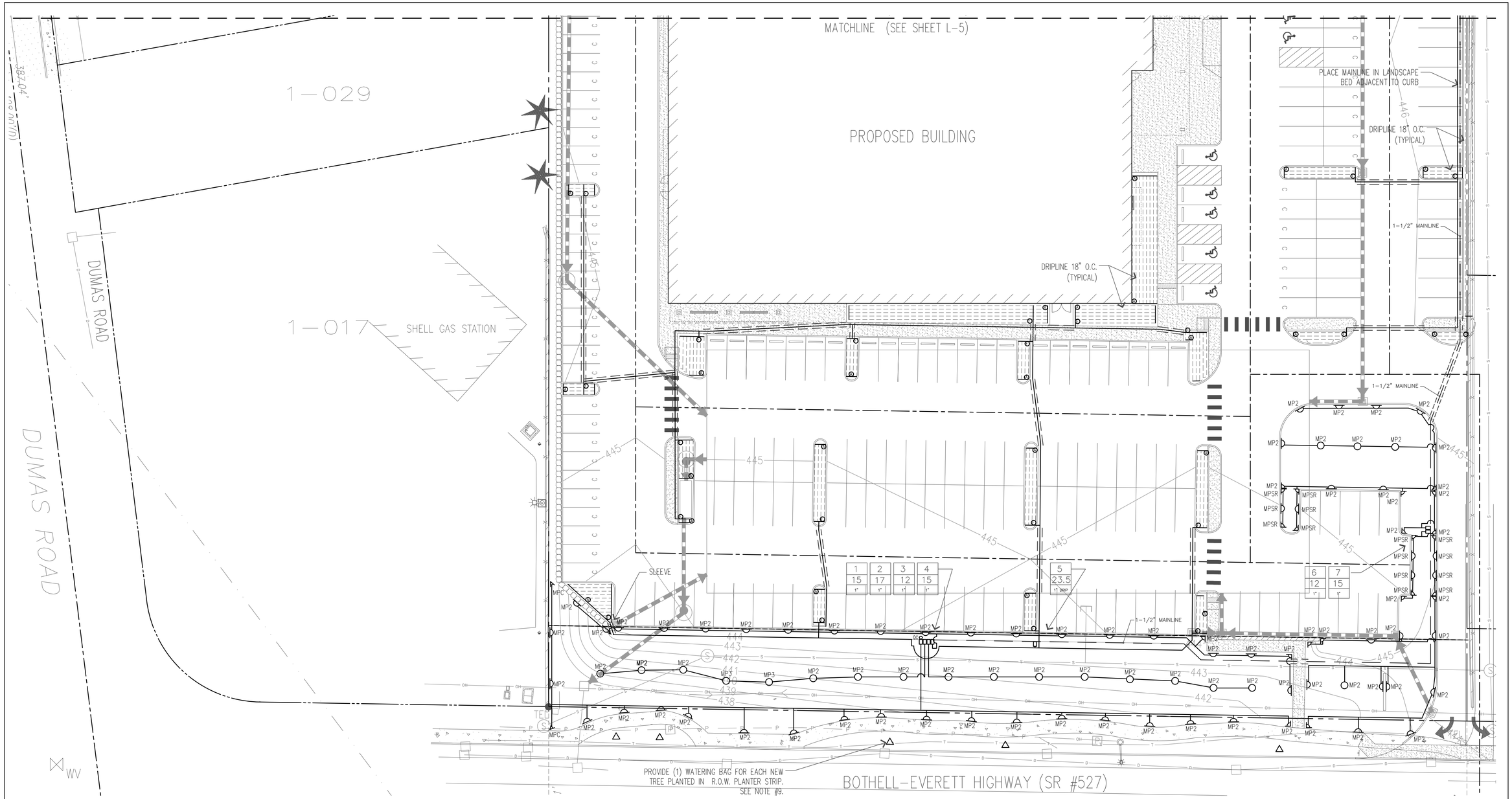

IRRIGATION SCHEDULE

SYM.	DESCRIPTION
	1" IRRIGATION METER (REFER TO CIVIL)
	POINT OF CONNECTION: (1) 1" BRONZE GATE VALVE (1) WILKENS 950XLC, 1" DOUBLE CHECK VALVE ASSEMBLY (1) HUNTER HQ44-LRC, 1" QUICK COUPLER (1) HUNTER ICV-151G-FS, 1-1/2" MASTER VALVE
C	IRRIGATION CONTROLLER : HUNTER IC-600-M-(2) ICM-600, EIGHTEEN STATION IRRIGATION CONTROLLER W/ HUNTER WSS-SEN, WIRELESS SOLAR-SYNC ET/RAIN/FREEZE SENSOR
	HUNTER ICV-101G-FS, 1" REMOTE CONTROL VALVE
	HUNTER ICZ-101-25, 1" DRIP CONTROL ZONE
	HUNTER HQ44-LRC-HSJ-1, 1" QUICK COUPLER W/ LOCKING RUBBER CAP
	HUNTER PLD-10-18, DRIPLINE WITH 1.00 GPH DRIP EMITTERS @ 18" O.C. W/ HUNTER TIE DOWN STAKES @ 3' O.C. USE HUNTER FLUSH VALVES AND AIR/VACUUM RELIEF VALVES AS REQUIRED.
	HUNTER PLD-BV, MANUAL FLUSH VALVE.
	HUNTER PLD-AVR, AIR/RELIEF VALVE
	1-1/2" MAINLINE, SCHEDULE 40 PVC
	CLASS 200 PVC LATERAL LINE (SIZED PER PIPE SIZING TABLE BELOW)
	4" SLEEVING, SCHEDULE 40 PVC (MINIMUM 2X SIZE OF INTERIOR PIPE)

IRRIGATION SCHEDULE

SYM.	DESCRIPTION	P.S.I.	RAD.	G.P.M.
MP3	HUNTER PROS-12-PRS40-MP3000 360, 12" POP-UP ROTATOR	40	30'	3.65
MP3	HUNTER PROS-12-PRS40-MP3000 90-210, 12" POP-UP ROTATOR	40	30'	1.82
MP3	HUNTER PROS-12-PRS40-MP3000 90-210, 12" POP-UP ROTATOR	40	30'	0.86
MP2	HUNTER PROS-12-PRS40-MP2000 360, 12" POP-UP ROTATOR	40	20'	1.47
MP2	HUNTER PROS-12-PRS40-MP2000 90-210, 12" POP-UP ROTATOR	40	20'	0.74
MP2	HUNTER PROS-12-PRS40-MP2000 90-210, 12" POP-UP ROTATOR	40	20'	0.40
MP1	HUNTER PROS-12-PRS40-MP1000 369, 12" POP-UP ROTATOR	40	14'	0.75
MP1	HUNTER PROS-12-PRS40-MP1000 90-210, 12" POP-UP ROTATOR	40	14'	0.37
MP1	HUNTER PROS-12-PRS40-MP1000 90-210, 12" POP-UP ROTATOR	40	14'	0.19
MPC	HUNTER PROS-12-PRS40-MP CORNER, 12" POP-UP ROTATOR	40	14'	0.19
MPSR	HUNTER PROS-12-PRS40-MP1000 90-210, 12" POP-UP ROTATOR	40	10'	0.42
MPSR	HUNTER PROS-12-PRS40-MP CORNER, 12" POP-UP ROTATOR	40	10'	0.23

PIPE SIZING TABLE

PIPE SIZE	MAX G.P.M.
3/4" CLASS 200	UP TO 10 G.P.M.
1" CLASS 200	UP TO 16 G.P.M.
1-1/4" CLASS 200	UP TO 26 G.P.M.
1-1/2" CLASS 200	UP TO 35 G.P.M.

1 — ZONE #
1.2 — G.P.M.
1" — VALVE SIZE / TYPE

IRRIGATION NOTES

1. VERIFY LOCATIONS OF ALL UNDERGROUND UTILITIES PRIOR TO COMMENCEMENT OF WORK. PROTECT ALL NEW AND EXISTING UTILITIES. PROMPTLY NOTIFY THE LANDSCAPE ARCHITECT OF ANY CONFLICT BETWEEN PROPOSED WORK AND OBSTRUCTIONS.
2. IRRIGATION CONTRACTOR SHALL PROVIDE PROTECTION OF ALL PROPERTY, PERSONS, WORK IN PROGRESS, STRUCTURES, UTILITIES, WALKS, CURBS, PAVED SURFACES AND EXISTING LANDSCAPE AND IRRIGATION TO REMAIN DURING THE INSTALLATION OF LANDSCAPE AND IRRIGATION WORK. VERIFY LOCATIONS OF ALL UNDERGROUND UTILITIES PRIOR TO COMMENCEMENT OF WORK AND PROTECT SAID UTILITIES.
3. IRRIGATION CONTRACTOR SHALL OBTAIN AND PAY FOR ALL NECESSARY PERMITS AND FEES AS REQUIRED BY APPLICABLE CODES AND ORDINANCES FOR THIS WORK. ALL WORK TO BE INSTALLED PER LOCAL CODE REQUIREMENTS AND MANUFACTURE'S SPECIFICATIONS.
4. PRESSURIZE MAINLINE TO 150 PSI FOR A PERIOD OF 1 HOUR CHECK ALL JOINTS AND CONNECTIONS FOR LEAKS AND REPAIR AS REQUIRED. PROVIDE WRIITEN DOCUMENTATION THAT A PRESSURE TEST HAS BEEN COMPLETED WITH NO MORE THAN 5 PSI LOSS DURING THE TEST DURATION.
5. UPON THE COMPLETION OF IRRIGATION WORK, OPERATE THE SYSTEM IN THE PRESENCE OF THE OWNERS REPRESENTATIVE. ADJUST AS REQUIRED.
6. GUARANTEE ALL MATERIALS AND WORKMANSHIP FOR A PERIOD OF ONE YEAR COMMENCING AT THE TIME OF FINAL ACCEPTANCE. THIS GUARANTEE DOES NOT APPLY TO WORK OR DAMAGE DONE TO THE IRRIGATION SYSTEM BY OTHERS AFTER FINAL ACCEPTANCE.
7. PRIOR TO FINAL ACCEPTANCE PROVIDE THE OWNER WITH A SET OF CLEARLY DRAWN ELECTRONIC AND REPRODUCIBLE RECORD DRAWINGS SHOWING ACTUAL LOCATION AND TYPE OF IRRIGATION ELEMENTS INSTALLED.
8. IRRIGATION CONTRACTOR SHALL PROVIDE PROTECTION OF ALL PROPERTY, PERSONS, WORK IN PROGRESS, STRUCTURES, UTILITIES, WALKS, CURBS, PAVED SURFACES AND EXISTING LANDSCAPE AND IRRIGATION TO REMAIN DURING THE INSTALLATION OF LANDSCAPE AND IRRIGATION WORK. VERIFY LOCATIONS OF ALL UNDERGROUND UTILITIES PRIOR TO COMMENCEMENT OF WORK AND PROTECT SAID UTILITIES.
9. PROVIDE (1) 15 GAL. SLOW RELEASE WATERING BAG FOR EACH NEW TREE PLACED IN EXISTING R.O.W. PLANTER STRIP. WATERING BAG TO BE TREEGATOR ORIGINAL SLOW RELEASE WATERING BAG (WWW.TREEGATOR.COM) OR APPROVED EQUAL.

IRRIGATION PLAN

0 10' 20' 40' 80'

SCALE: 1" = 20' - 0"

SHEET SIZE: 24" x 36" AT 100%

WBLA
Landscape Architecture
Site Planning Irrigation
16630 30th Dr. S.E.
Bothell, WA 98012
phone (425) 417-6029

PROJECT:
ARENA SPORTS

LOCATION:
MILL CREEK, WA

CLIENT:
CSA REAL ESTATE, LLC
6840 FORT DENT WAY
SEATTLE, WA 98188

NO.	DATE	REVISION
	09.20.2016	PERMIT
	12.01.2016	PERMIT RESUBMITTAL

DESIGNED CB
DRAWN CB
CHECKED CB

PROFESSIONAL SEAL
STATE OF WASHINGTON REGISTERED LANDSCAPE ARCHITECT
WILLIAM A. BROWN
CERTIFICATE NO. 501

DATE 08.29.2016

PROJECT NO. 201630

TITLE
IRRIGATION PLAN

SHEET NUMBER
L-4

© WBLA 2015

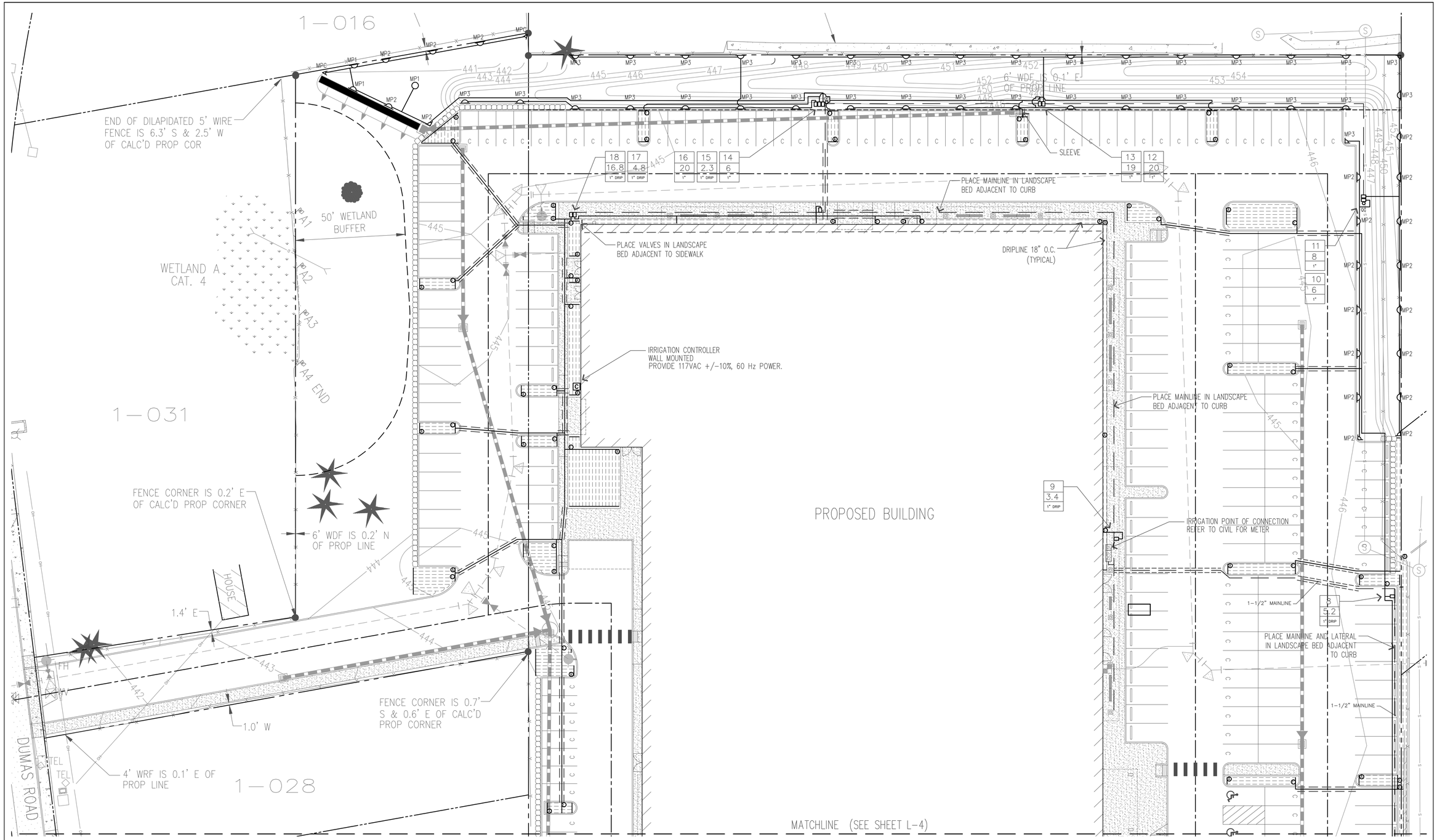

IRRIGATION PLAN

0 10' 20' 40' 80'

SCALE: 1" = 20' - 0"

SHEET SIZE: 24" x 36" AT 100%

WBLA Landscape Architecture Site Planning Irrigation
16630 30th Dr. S.E.
Bothell, WA 98012
phone (425) 417-6019

PROJECT:
ARENA SPORTS

LOCATION:
MILL CREEK, WA

CLIENT:
CSA REAL ESTATE, LLC
6840 FORT DENT WAY
SEATTLE, WA 98188

NO.	DATE	REVISION
	09.20.2016	PERMIT
	12.01.2016	PERMIT RESUBMITTAL

DESIGNED CB
DRAWN CB
CHECKED CB

PROFESSIONAL SEAL

STATE OF WASHINGTON
REGISTERED
LANDSCAPE ARCHITECT
WILLIAM A. BROWN
CERTIFICATE NO. 501

DATE 08.29.2016

PROJECT NO. 201630

TITLE
IRRIGATION PLAN

SHEET NUMBER
L-5

© WBLA 2015

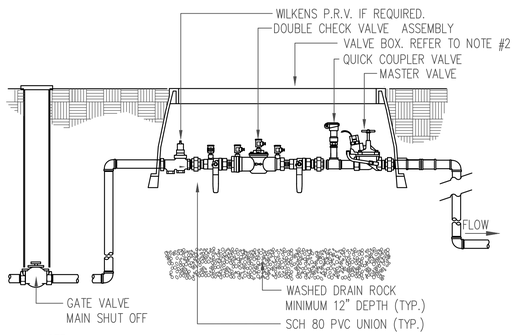

NOTE:
1. INSTALLATION SHALL CONFORM WITH CITY OF FIFE STANDARDS. REVIEW CURRENT CITY STANDARDS.
2. FOR 3/4" & 1" DEVICES, CARSON JUMBO BOXES FOR 1-1/2" & 2" DEVICES, INSTALL FOG TITE #2 REINFORCED CONCRETE BOXES

1 POINT OF CONNECTION
NTS

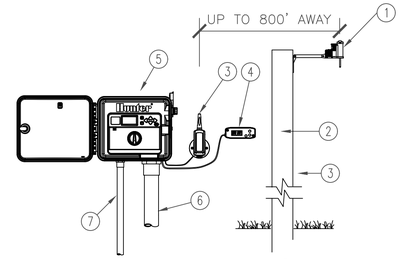

1. MODEL: WIRELESS SOLAR SYNC SENSOR, MOUNT UP TO 800' FROM RECEIVER
2. MOUNT SENSOR ON ROOF PARPIT ABOVE CONTROLLER LOCATION WHERE SENSOR CAN RECEIVE FULL SUN, IS OPEN TO RAINFALL.
3. WIRELESS SOLAR SYNC RECEIVER MOUNTED ON THE WALL NEXT TO THE CONTROLLER CABINET
4. MODEL: SOLAR SYNC MODULE MOUNT LESS THAN 6' AWAY FROM CONTROLLER
5. HUNTER I-CORE CONTROLLER WALL MOUNTED
6. VALVE CONTROL WIRE CONDUIT TO EXTERIOR LANDSCAPE BED
7. 1/2" POWER SUPPLY CONDUIT J-BOX INSIDE CONTROLLER CONNECT PER LOCAL CODE

NOTE
MOUNT CONTROLLER WITH LCD SCREEN AT EYE LEVEL. CONTROLLER SHALL BE HARD-WIRED TO GROUNDED 110 or 220 VAC SOURCE.

2 IRRIGATION CONTROLLER
NTS

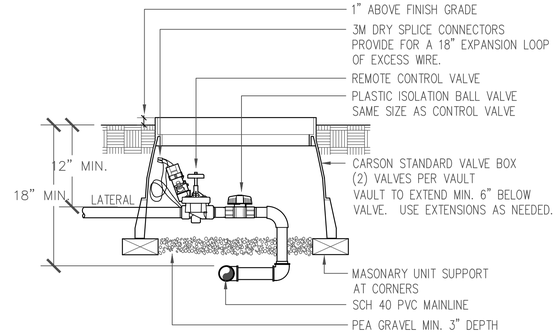

NOTES:
1. VALVE BOX SHALL NOT REST ON PIPES.
2. ALL PIPE AND FITTINGS WITHIN VAULT TO BE SCH 40 PVC SAME SIZE AS OUTLET LATERAL PIPE.
3. PROVIDE EXPANSION COILS AT EACH WIRE CONNECTION IN VALVE BOX.
4. COMPACT SOIL AROUND VALVE BOX TO SAME DENSITY AS UNDISTURBED ADJACENT SOIL.
5. PROVIDE VALVE BOX EXTENSIONS AS REQUIRED.
6. TAPE CONTROL WIRES AND SPARE TO BOTTOM OF MAINLINE (TYPICAL).

3 AUTOMATIC VALVE
NTS

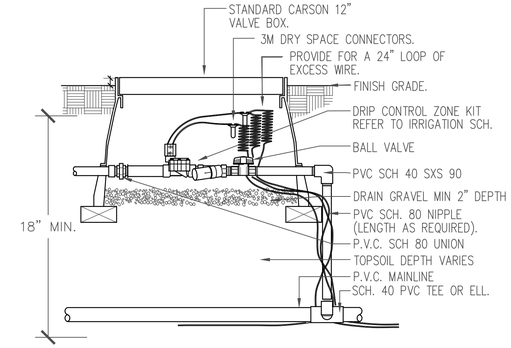

NOTES:
1. VALVE BOX SHALL NOT REST ON PIPES.
2. ALL PIPE AND FITTINGS WITHIN VAULT TO BE SCH 40 PVC SAME SIZE AS OUTLET LATERAL PIPE.
3. PROVIDE EXPANSION COILS AT EACH WIRE CONNECTION IN VALVE BOX.
4. COMPACT SOIL AROUND VALVE BOX TO SAME DENSITY AS UNDISTURBED ADJACENT SOIL.
5. PROVIDE VALVE BOX EXTENSIONS AS REQUIRED.
6. TAPE CONTROL WIRES AND SPARE TO BOTTOM OF MAINLINE (TYPICAL).

4 DRIP CONTROL ZONE
NTS

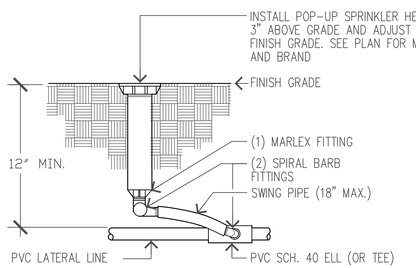

5 POP-UP HEAD
NTS

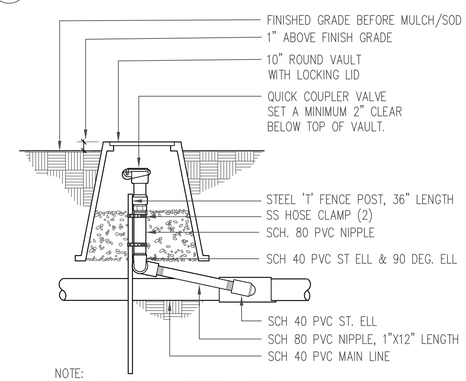

NOTE:
1. VALVE BOX SHALL NOT REST ON PIPES.
2. VALVE TO BE SET PLUM & CENTERED IN VALVE BOX.
3. PROVIDE DRAIN ROCK TO A MINIMUM DEPTH OF 6".
4. CONTRACTOR TO PROVIDE (1) EACH QCV KEY AND SWIVEL HOSE ELL.

6 QUICK COUPLER VALVE
NTS

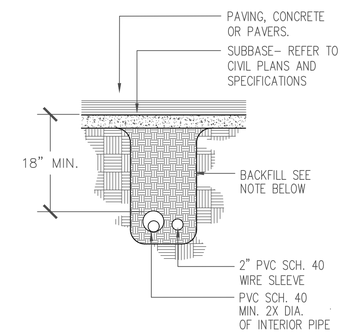

NOTE:
1. BACKFILL TO BE FREE OF ROCK OR DEBRIS LARGER THAN 1" DIA. ABSOLUTELY NO ROCK OR DEBRIS SHALL BE PLACED DIRECTLY ADJACENT TO ANY PIPE.
2. REPLACE DISTURBED OR DAMAGED LANDSCAPE.

7 SLEEVING
NTS

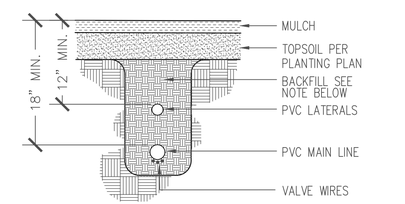

NOTE:
1. BACKFILL TO BE FREE OF ROCK OR DEBRIS LARGER THAN 1" DIA. ABSOLUTELY NO ROCK OR DEBRIS SHALL BE PLACED DIRECTLY ADJACENT TO ANY PIPE.
2. REPLACE DISTURBED OR DAMAGED LANDSCAPE.

8 PIPE TRENCHING
NTS

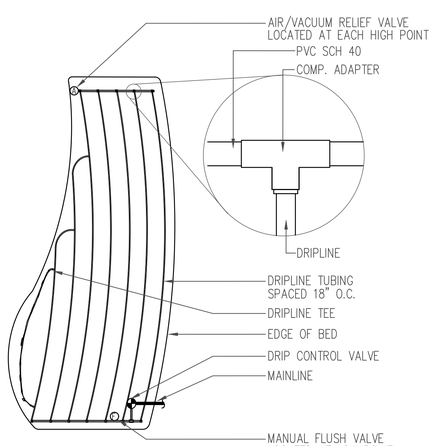

9 DRIPLINE LAYOUT
NTS

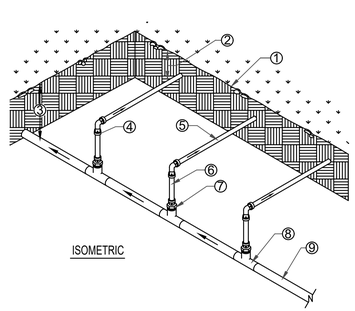

1. FINISH GRADE OF TOPSOIL
2. MIN. DEPTH OF 2" BELOW TOPSOIL FINISH GRADE
3. DEPTH OF PVC SUPPLY MANIFOLD MINIMUM 12"
4. COMPRESSION FITTINGS FOR 90's AND TEE'S
5. DRIPLINE
6. BLANK POLY TUBING LENGTH AS NEEDED
7. 1/2" MTP ADAPTER
8. PVC TEE (SxSxT) WITH 1/2" FPT
9. PVC SUPPLY MANIFOLD FROM DRIP ZONE KIT

NOTES:
1. INSTALLATION TO BE COMPLETED IN ACCORDANCE WITH MANUFACTURERS SPECIFICATIONS.
2. AIR/VACUUM RELIEF VALVE TO BE PLACED ON BLANK TUBING AT HIGH POINT OF DRIPLINE.

10 DRIPLINE HEADER
NTS

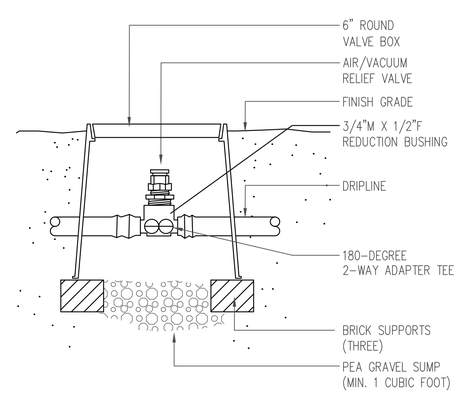

11 AIR / VACUUM RELIEF VALVE
NTS

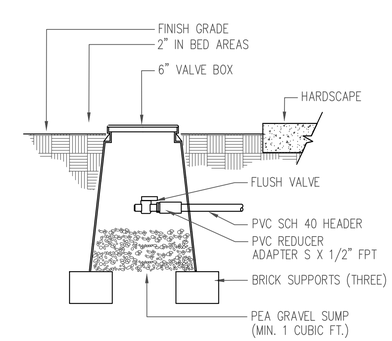

12 FLUSH VALVE
NTS

© WBLA 2015

SHEET SIZE: 24" x 36" AT 100%

WBLA Landscape Architecture Site Planning Irrigation
16630 30th Dr. S.E.
Bothell, WA 98012
phone (425) 417-6029

PROJECT:
ARENA SPORTS

LOCATION:
MILL CREEK, WA

CLIENT:
CSA REAL ESTATE, LLC
6840 FORT DENT WAY
SEATTLE, WA 98188

NO.	DATE	REVISION
	09.20.2016	PERMIT
	12.01.2016	PERMIT RESUBMITTAL

DESIGNED CB
DRAWN CB
CHECKED CB

PROFESSIONAL SEAL
STATE OF WASHINGTON
REGISTERED
LANDSCAPE ARCHITECT
WILLIAM A. BROWN
CERTIFICATE NO. 501

DATE 08.29.2016
PROJECT NO. 201630

TITLE
IRRIGATION DETAILS

SHEET NUMBER
L-6